Fast Track Troubleshooting

Publication # tsRS253 Revision Date 03/30/2011

Models Covered:
RS253BAWW/XAA
RS253BAVQ/XAA
RS253BABB/XAA
RS253BASB/XAA

IMPORTANT SAFETY NOTICE – "For Technicians Only" This service data sheet is intended for use by persons having electrical, electronic, and mechanical experience and knowledge at a level generally considered acceptable in the appliance repair trade. Any attempt to repair a major appliance may result in personal injury and property damage. The manufacturer or seller cannot be responsible, nor assume any liability for injury or damage of any kind arising from the use of this data sheet.

Notice: Bulletin on parts change & Thermal Fuse to Bi-Metal

SUPPORT INFORMATION
Training — Plus One **http://my.plus1solutions.net/clientPortals/samsung/**
Help — GSPN **http://service.samsungportal.com/**
Samsung Product Support TV **http://support-us.samsung.com/spstv/howto.jsp**
Customer information videos and chat programs. Programs for Fridges, Laundry, Ranges & D/W

Self Diagnosis: Press both buttons (Power Freeze—Power Cool) *simultaneously* (No sound when both buttons are pressed at the same time) 'til the display quits blinking and beeps, 8-12 seconds, then release and read Fault Codes.
This will also cancel the Fault Mode created by self-diagnosis at power up.

Forced Mode: Press both buttons (Power Freeze – Fridge) *simultaneously* (No sound when both buttons are pressed at the same time) 'til it beeps and goes blank, 8-12 seconds

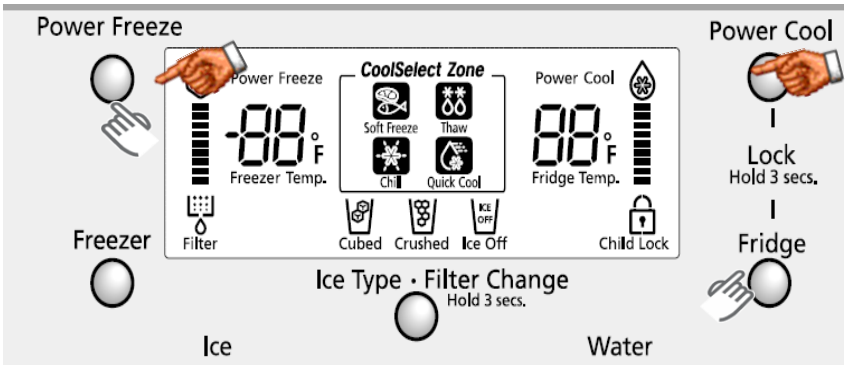

Forced Compressor → *Forced Defrost for Fridge* → *Forced Defrost both compartment* → *Cancellation, unplug unit*

Press Freezer button one time at the Test Mode to Force Compressor Run, measure fan and compressor voltages at main PCB

Press Freezer button a second time to Force Defrost of Fridge, measure defrost voltage at main PCB

Press Freezer button a third time to Force Defrost for Fridge & Freezer, measure defrost voltages at main PCB

Wait 5 seconds between button pushes

Sales Mode, No Compressor Operation: Press Power Freeze & Freezer temp buttons simultaneously for 3 sec (you will hear a "Ding Dong") to remove or put into Sales Mode. When in the Sales Mode the Display will show "OF" "OF".

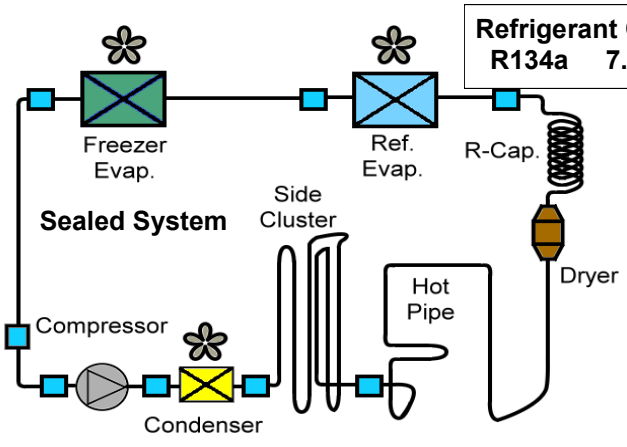

Component Value Chart

Component	Resistance	Wattage	Voltage
Freezer Defrost Heater	58Ω	215	120vac
Fridge Defrost Heater	103Ω	140	120vac
Freezer Drain Heater	320	45	120vac
Dispenser Heater	2880Ω	5	120vac
Water Tank Heater	3600Ω	4	120vac
Fill Tube Heater	2880Ω	5	120vac
Sensors	2.5kΩ-89kΩ	N/A	1~4.5vdc
Fans	N/A	N/A	7~12vdc

FLEX TRAY Ice Makers

When the initial power is applied, the ice tray will stand by for 2 hours. After the 2-hour standby time, the Ice Maker Sensor will check the temperature , when it is lower than 1.5℉ for more than 5 minutes, it will do a harvest, with or without ice in the tray, then fill with water. 58 minutes after water is supplied to the Ice Tray, the Ice Maker Sensor temperature will be checked. When the Ice Maker Sensor maintains lower than 1.5℉ for 5 minutes, it completes the harvest (if the ice bin is not sensed as full).

Thermistor senses temperature to determine water fill on newer units

Filling the tray

After the water fill is completed, the ice maker sensor will evaluate the water volume one and a half minutes later. When it detects no or low water level, it will add more water. First supply time will be 1.5 sec, next one will be 1 sec and the last will be 2 sec.

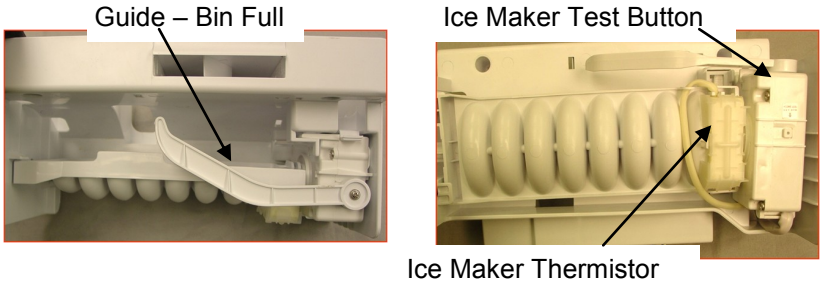

Shattered Ice – Flex Tray

When all ice shatters, it's because of a bad tray or ice cube temp that is too cold (lower than -5 degrees). In some areas, there are water issues that can also cause shattered cubes. The temp in the freezer should not have any effect on this issue, as long as it's below 1.5 degrees F, as a properly installed sensor will not read the freezer temp, only the water/ice temp.

Check the Ice tray for defects in the plastic. Ice that is too cold will shatter during harvest. This can be from the (1) sensor not reading the correct temp (2) or the sensor not mounted correctly (3). By programming the icemaker offset value to a lower number (4), the board not understanding the reading.

To check the sensor, you must check the tray temp (not air temp) and compare it to the sensor reading. The sensor should read 3.7 volts at the main board connector when the cube temperature is 1 degree. After the fill, the sensor will read water temp 1.5 to 2.2 volts.

To clear offsets, put unit into Diagnostics mode.

Please note, some shattering is normal for a flex tray icemaker.

FREEZER TEMPERATURE CONTROL BY THE ICE MAKER

Interior Temperature of the freezer will be set to -14 degrees Fahrenheit until the ice bucket is full. When the ice bucket is full, the freezer will maintain original set temperature. Also, whenever the ice is used, the freezer will again set to -14 degrees Fahrenheit. Selecting "Ice Off" will allow the freezer to be controlled by the set temperature. If water is not hooked up, the freezer will always be at –14 unless "Ice Off" is selected.

DEFROST

This model series uses a Defrost Heater in the Fridge and the Freezer compartment that is part of the Evaporator Coil.

NOTE: Evaporator Covers May Break If Removed While Frozen To Coil. They must be replaced if there is any damage, as this will cause "ice" to form at top or bottom of the evaporator coil or in the drains.

Temperature/Resistance/Voltage Chart for Samsung Refrigerators Sensors

Temp.	(Ω)	Volts		Temp.	(Ω)	Volts		Temp.	(Ω)	Volts		Temp.	(Ω)	Volts
-29.2°F	64227	4.326		1.4°F	28021	3.685		32.0°F	13290	2.853		62.6°F	6771	2.019
-27.4°F	61012	4.296		3.2°F	26760	3.64		33.8°F	12749	2.802		64.4°F	6521	1.974
-25.6°F	57977	4.264		5.0°F	25562	3.594		35.6 °F	12233	2.751		66.2°F	6281	1.929
-23.8°F	55112	4.232		6.8°F	24425	3.548		37.4 °F	11741	2.7		68.0°F	6052	1.885
-22.0°F	52406	4.199		8.6°F	23345	3.501		39.2 °F	11271	2.649		69.8°F	5832	1.842
-20.2°F	49848	4.165		10.4°F	22320	3.453		41.0°F	10823	2.599		71.6°F	5621	1.799
-18.4°F	47431	4.129		12.2°F	21345	3.405		42.8°F	10395	2.548		75.2°F	5225	1.716
-16.6°F	45146	4.093		14.0°F	20418	3.356		44.6°F	9986	2.498		77.0°F	5000	1.675
-14.8°F	42984	4.056		15.8°F	19537	3.307		46.4°F	9596	2.449		78.8°F	4861	1.636
-13.0°F	40938	4.018		17.6°F	18698	3.258		48.2°F	9223	2.399		80.6°F	4690	1.596
-11.2°F	39002	3.98		19.4°F	17901	3.208		50.0°F	8867	2.35		86.0°F	4218	1.483
-9.4°F	37169	3.94		21.2°F	17142	3.158		51.8°F	8526	2.301		87.8°F	4072	1.447
-7.6°F	35433	3.899		23.0°F	16419	3.107		53.6°F	8200	2.253		89.6°F	3933	1.412
-5.8°F	33788	3.858		24.8°F	15731	3.057		55.4°F	7888	2.205		91.4°F	3799	1.377
-4.0°F	32230	3.816		26.6°F	15076	3.006		57.2°F	7590	2.158		95.0°F	3547	1.309
-2.2°F	30752	3.773		28.4°F	14452	2.955		59.0°F	7305	2.111		96.8°F	3428	1.277
-0.4°F	29350	3.729		30.2°F	13857	2.904		60.8°F	7032	2.064		100.4°F	3204	1.213

DC FAN MOTORS

Brushless DC Fan motors are used to save energy. The fans operate at two speeds. Fan speed information is read by the Main PCB. If the fan speed exceeds 600 RPM or the speed is too slow, or stopped the fan drive circuit is disabled, After 10 seconds the circuit tries again with 3 seconds of DC voltage. If the fan continues this activity for 5 cycles, 10 seconds off 3 seconds on, the fan drive circuit is disabled for 10 minutes.

TO TEST THE FAN CIRCUIT VOLTAGE.

Power off and back on to check the DC voltage to the motor, wait from 10 to 60 seconds for the fan voltage to kick in, and then check fan voltage, the average reading is 9 VDC. If you get 3 seconds of voltage every 10 seconds for the 5 fan power up cycles, then the Main PCB is good.

NOTE: You may need to put unit in FORCED FREEZE mode to activate the fans/compressor.

If the fan blade is blocked by ice, then defrost and check the motor again, after removing power from the unit.

If the evaporator is ice blocked and thus blocking the air flow, the fan will over RPM and will be stopped. Remove ice and check the motor again. If everything is clear around the fan blade then the motor would be at fault. Continuous fan errors will be displayed on the front panel display. **PLEASE NOTE:** The door switches control the evaporator fan motors. Have them closed to test the motors. Delay time 10 – 60 seconds.

Samsung 'Refrigerator' Diagnostic Code Quick Guide			
Error Items	**LED**	**TROUBLE**	**TESTING**
I/M-SENSOR		Ice Maker Sensor Error- open or short-circuit, connector failure. Cause is also a temperature reading > 122°or < -58 ° F	The voltage at MAIN PCB Sensor betw een 4.5V~1.0V
R-SENSOR		Refrigerator Room Sensor Error- open or short-circuit, connector failure. Cause is also a temperature reading > 122°or < -58 ° F.	The voltage at MAIN PCB Sensor betw een 4.5V~1.0V
DEFROST SENSOR OF R ROOM		Ref. Defrost Sensor Error- open or short-circuit, connector failure. Cause is also a temperature reading > 122°or < -58 ° F	The voltage at MAIN PCB Sensor betw een 4.5V~1.0V
R-FAN ERROR		This error indicates the Refrigerator Evap Fan is not spinning at the correct RPM or the fan feedback line is open.	Fan voltage at MAIN PCB shall be betw een 7V~12V
I/M FUNCTION ERROR		This error indicates the Ice tray has not returned to level after an ice harvest. The error is displayed after three failed attempts.	Replace I/M
COOL SELECT ZONE SENSOR		Cool Select Zone Sensor Error- open or short-circuit, connector failure. Cause is also a temperature reading > 122°or < -58 ° F	The voltage at MAIN PCB Sensor betw een 4.5V~1.0V
R-DEFROSTING ERROR		Refrigerator Room defrost heater- open or short-circuit, connector failure, or defective temperature fuse/bi-metal. Defrost on over 80 minutes	Disconnect defrost connector from PCB, check resistance
EXT-SENSOR		Ambient Temp. Sensor Error- open or short-circuit, connector failure. Cause is also a temperature reading > 122°or < -58 ° F	The voltage at MAIN PCB Sensor betw een 4.5V~1.0V
F-SENSOR		Freezer Compartment Sensor Error- open or short-circuit, connector failure. Cause is also a temperature reading > 122°or < -58 ° F	The voltage at MAIN PCB Sensor betw een 4.5V~1.0V
F-DEF-SENSOR		Freezer Room Defrost Sensor Error- open or short-circuit, connector failure. Cause is also a temperature reading > 122°or < -58 ° F	The voltage at MAIN PCB Sensor betw een 4.5V~1.0V
F-FAN ERROR		This error indicates the Freezer Evap. Fan is not spinning at the correct RPM or the fan feedback line is open.	Fan voltage at MAIN PCB shall be betw een 7V~12V
C-FAN ERROR		This error indicates the Condenser Fan is not spinning at the correct RPM or the fan feedback line is open.	Fan voltage at MAIN PCB shall be betw een 7V~12V
F-DEFROSTING ERROR		Freezer defrosting heater- open or short-circuit, connector failure, or defective temperature fuse/bi-metal. Defrost on for over 80 minutes	Disconnect defrost connector from PCB, check resistance
Uart ERROR COMMUNICATION		This error is not applicable, if the error is detected during diagnostic testing please ignore it.	No Repair Necessary
L-M ERROR COMMUNICATION		Communication error w ithin the Main PCB	Replace main PCB
P-M ERROR COMMUNICATION		Communication betw een the Main PCB and Keypad	Check w iring in door & cabinet, Panel PCB, Main PCB

CN= Connector # for measuring voltages; () means go to connector #, pin # shown in () for voltage common.
CN30 Sensors & Switches — Component Name
4-(CN76-1) F Def Sensor (Org-Gry) 2.3~4.2vdc — Voltage on operating component
Pin #s & wire colors on each connector to measure voltages

Key To Read PCB Layout

CN71 120vac
1-(CN70-11) Cube Solenoid (Yel-Red)
3-(CN70-11) Auger Mtr (Pnk-Red)
5-(CN70-11) Ice-Motor Solenoid (Prp-Red)
7-(CN70-11) R-Fan (W/Blu-Red)

CN70 120vac
1-11 Dispenser/Water Tank HTR (Blu-Red)
3 (Gry) Neutral
5-11 Compressor (S/Blu-Red)
9-7 R-Def/Ice Pipe HTR (Wht-Org)
11 (Red) L1
13-7 F-Def HTR (Brn-Org)

CN50 Panel Display
4-6 (Org-Blu)**12 VDC**
5-6 (Pnk-Blu) **5VDC**
7-8 (Prp-Gry) Disp Ice Sw

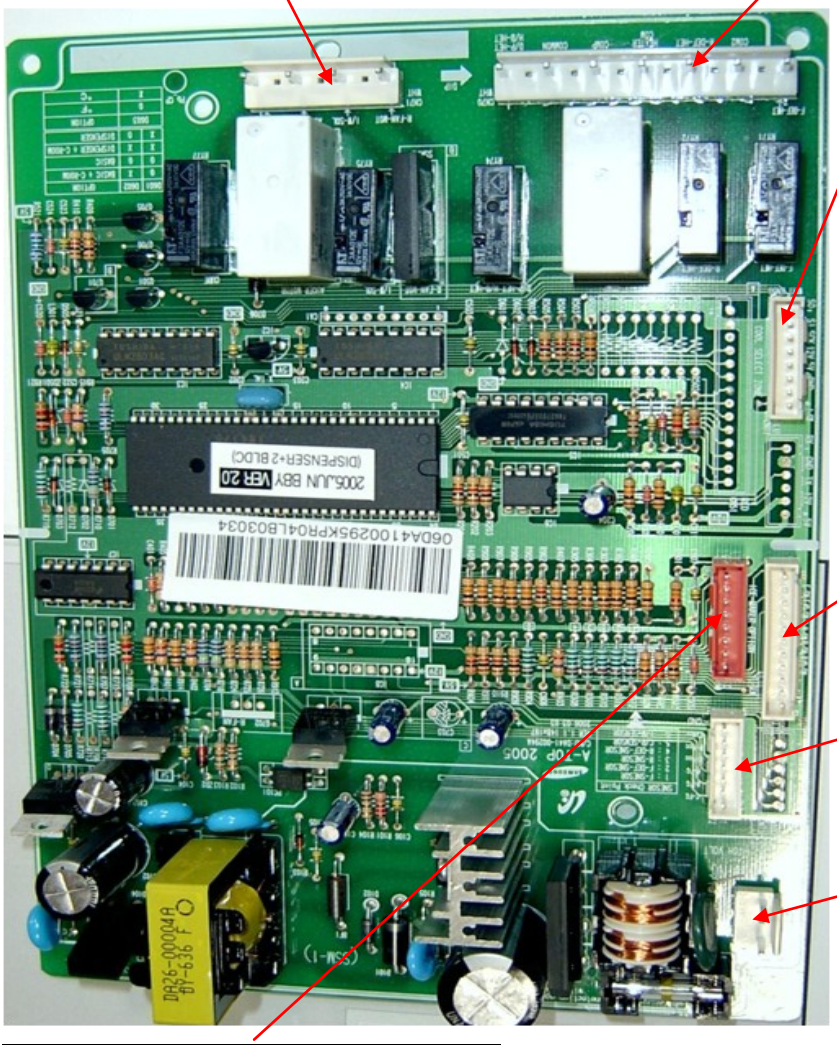

CN30 Sensors
1-2 F Door SW (W/Red-Brn) **5vdc**
5-6 R Door SW (W/Blu-Brn) **5vdc**
3-(CN72-7) F Sensor (Yel-Brn) **3.5~4.2vdc**
4-(CN72-7) F-Def Sensor (Blu-Brn) **2.3~4.2vdc**
7-(CN72-7) R Sensor (Gry-Brn) **2.4~2.8vdc**
8-(CN72-7) R-Def Sensor (Prp-Brn) **2~4.2vdc**

CN72
6-7 F-Fan (Yel-Gry) 10~11.1vdc
4-7 C-Fan (S/Blu-Gry) 8.3~10vdc
3 F-Fan Control (Blk)
1 C-Fan Control (Red)

CN10 Transformer power
1-3 (Blk-Red) **120 VAC**

CN90 Ice Maker
1-2 I/M Motor (Red-Blk) **12vdc**
3-4 I/M Sensor (Wht-Wht) **2.3~3.3vdc**
5-8 Test Sw (Gry-S/Blu) **5vdc**
6-8 Horizontal Sw (Blu-S/Blu) **5vdc**
7-8 Check Sw (Prp-S/Blu) **5vdc**

RS253

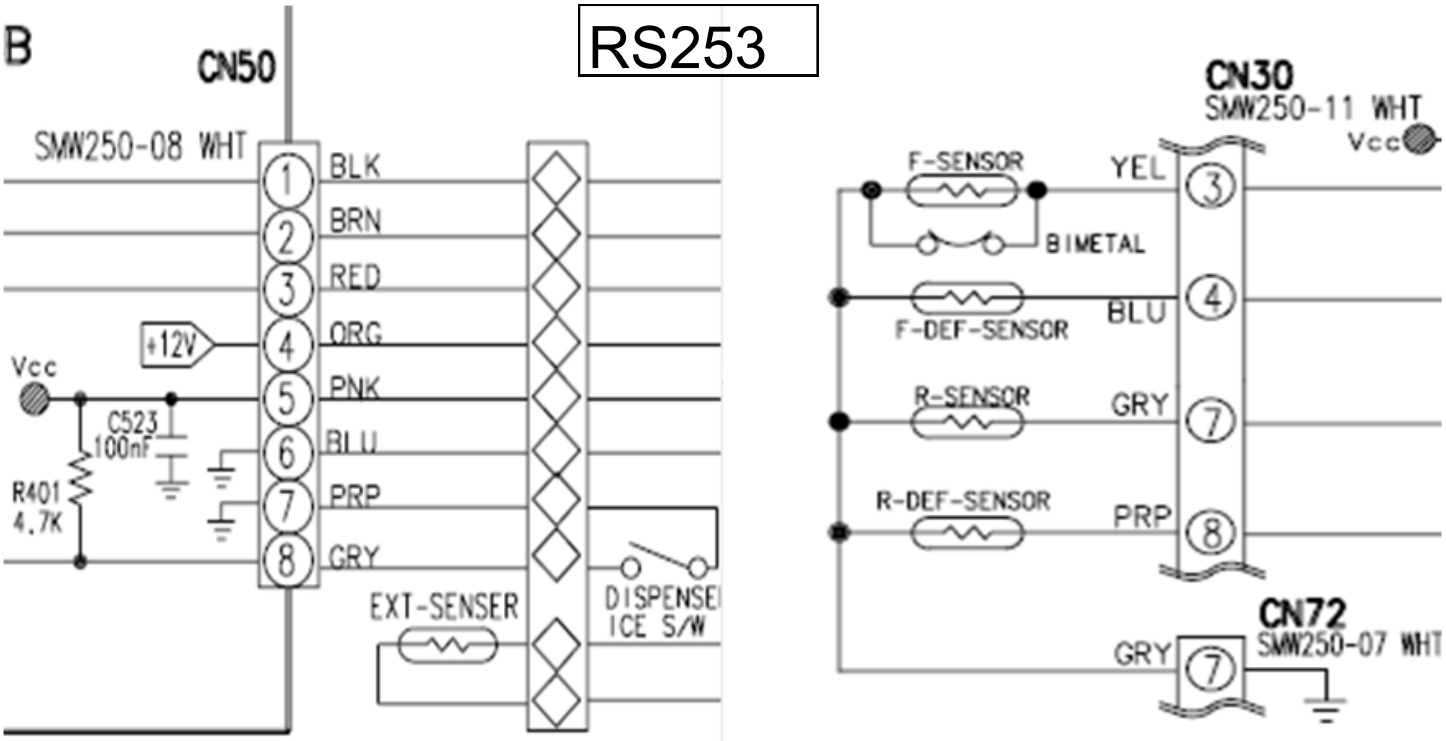

< BLDC-FAN input voltage >

R-FAN	F-FAN		C-FAN	
	HIGH	LOW	HIGH	LOW
AC-FAN	11.1V	10.0V	10.0V	8.3V

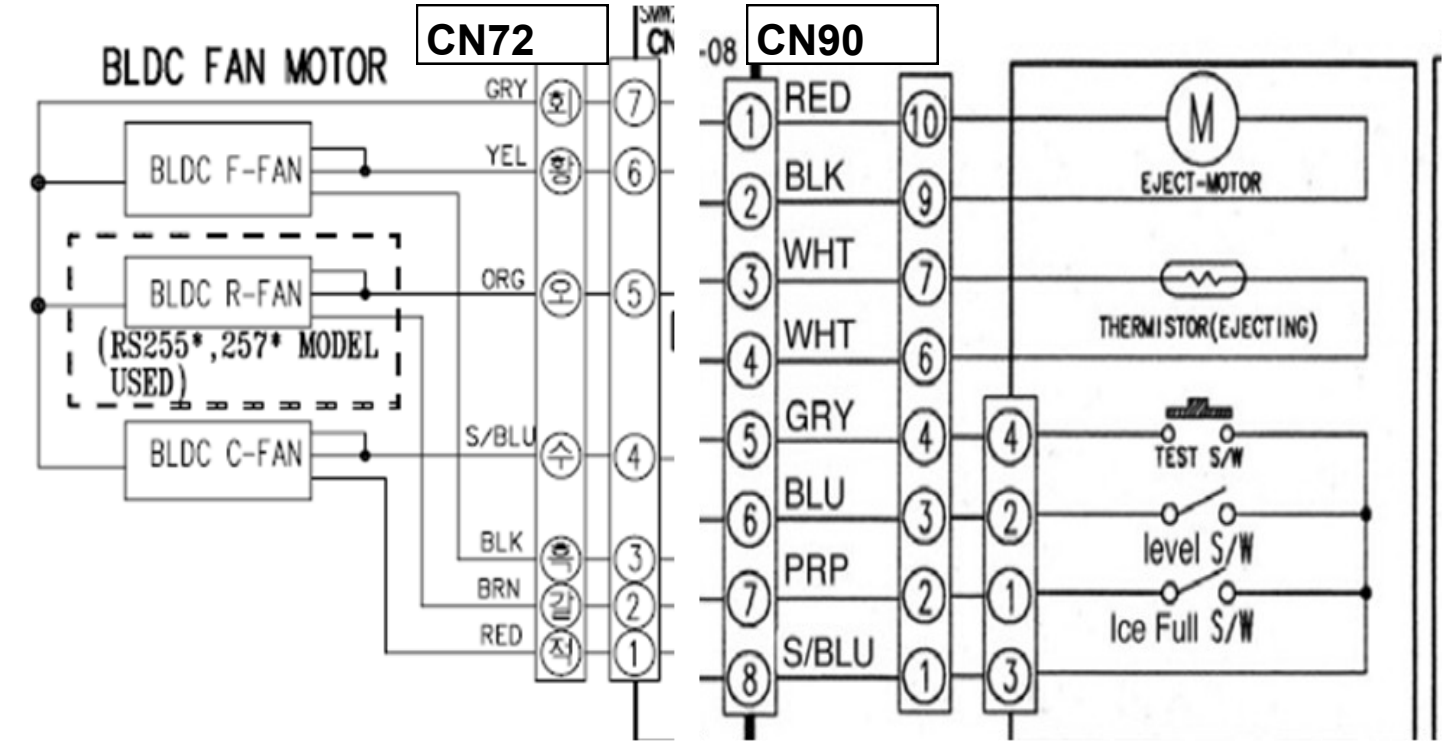

RS253

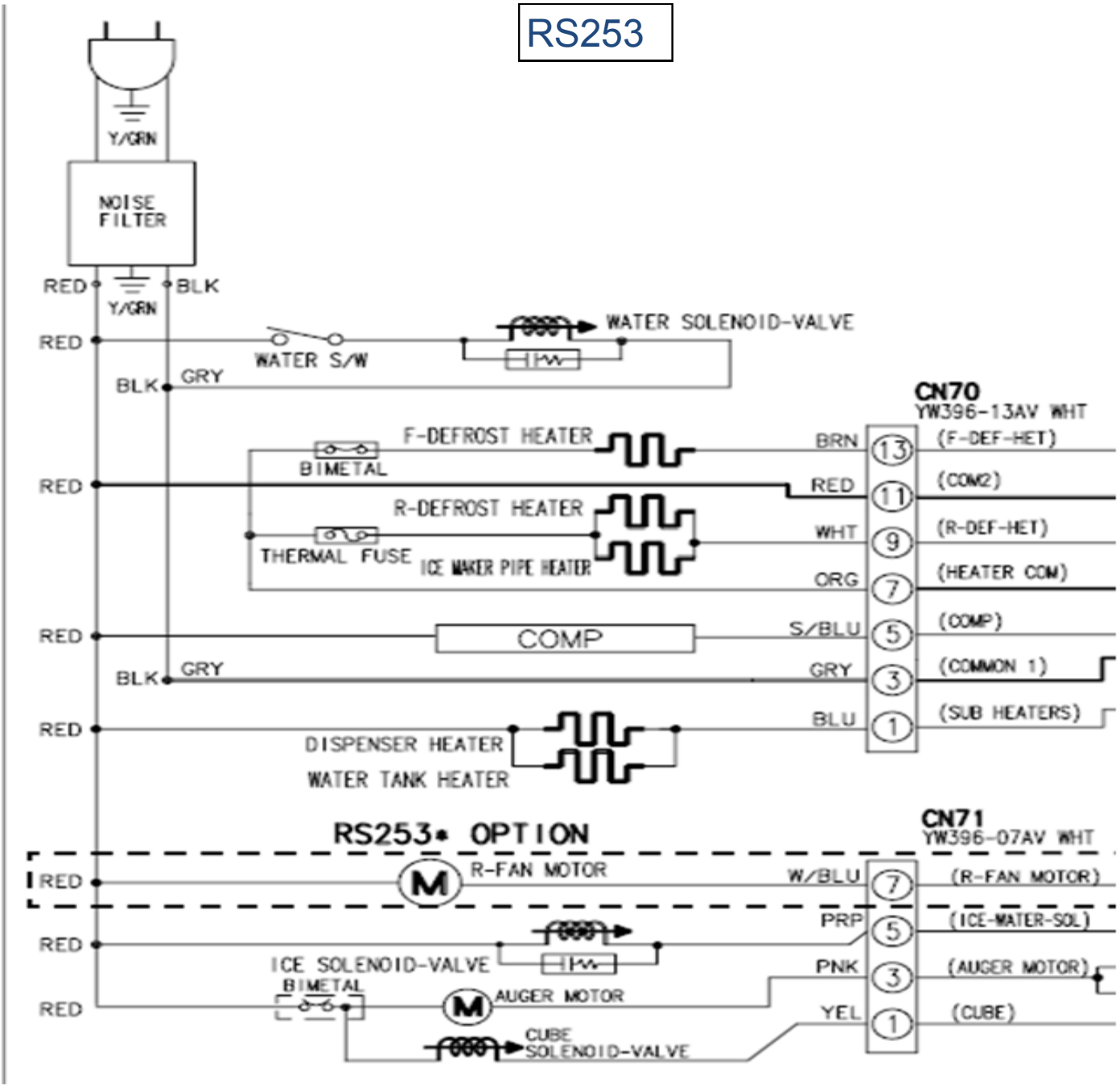
Y/GRN
NOISE FILTER
RED
BLK
Y/GRN
WATER SOLENOID-VALVE
WATER S/W
BLK
GRY
CN70
YW396-13AV WHT
F-DEFROST HEATER
BIMETAL
BRN
13
(F-DEF-HET)
RED
11
(COM2)
R-DEFROST HEATER
THERMAL FUSE
ICE MAKER PIPE HEATER
WHT
9
(R-DEF-HET)
ORG
7
(HEATER COM)
COMP
S/BLU
5
(COMP)
GRY
3
(COMMON 1)
BLU
1
(SUB HEATERS)
DISPENSER HEATER
WATER TANK HEATER
RS253• OPTION
CN71
YW396-07AV WHT
R-FAN MOTOR
W/BLU
7
(R-FAN MOTOR)
PRP
5
(ICE-WATER-SOL)
ICE SOLENOID-VALVE
BIMETAL
AUGER MOTOR
PNK
3
(AUGER MOTOR)
YEL
1
(CUBE)
CUBE SOLENOID-VALVE

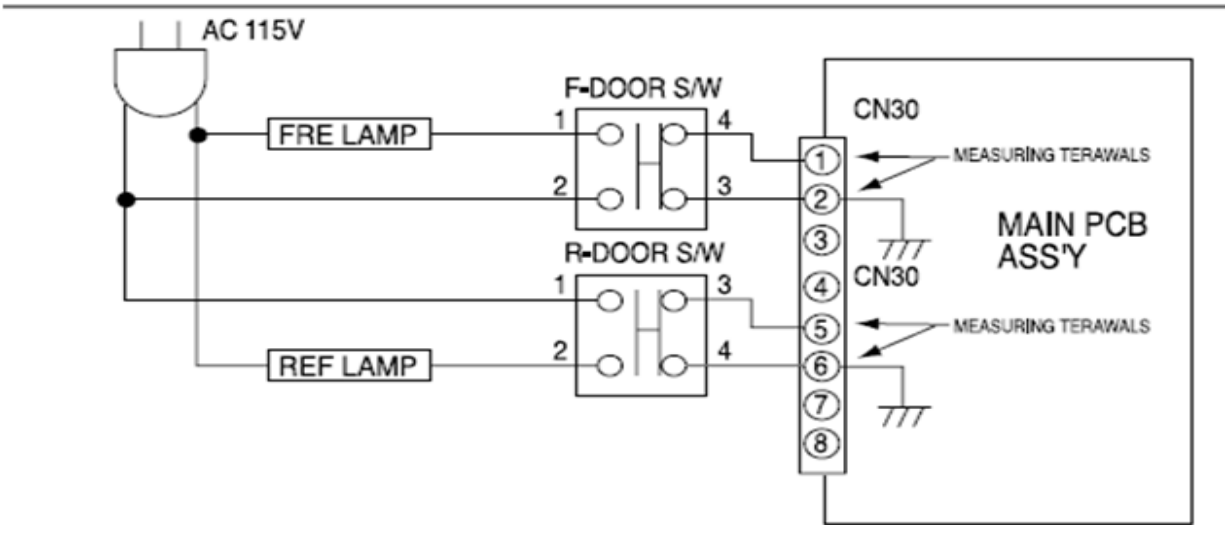
AC 115V
FRE LAMP
F-DOOR S/W
1
2
3
4
R-DOOR S/W
REF LAMP
CN30
MEASURING TERAWALS
MAIN PCB ASS'Y
CN30
MEASURING TERAWALS
1
2
3
4
5
6
7
8