Website:http://www.LGservice.com [For U.S.A]
www.lg.ca [For Canada]

ELECTRIC & GAS DRYER
SERVICE MANUAL

CAUTION

READ THIS MANUAL CAREFULLY TO DIAGNOSE
TROUBLES CORRECTLY BEFORE OFFERING SERVICE.

MODEL : DLE5977W/DLG5988W
DLE5977B/DLG5988B
DLE3777W/DLG3788W

LG Electronics Inc.

Feb. 2004 PRINTED IN KOREA

P/No.:3828EL3005A

IMPORTANT SAFETY NOTICE

The information in this service guide is intended for use by individuals possessing adequate backgrounds of electrical, electronic, and mechanical experience. Any attempt to repair a major appliance may result in personal injury and property damage. The manufacturer or seller cannot be responsible for the interpretation of this information, nor can it assume any liability in connection with its use.

⚠ WARNING !

To avoid personal injury, disconnect power before servicing this product. If electrical power is required for diagnosis or test purposes, disconnect the power immediately after performing the necessary checks.

RECONNECT ALL GROUNDING DEVICES

If grounding wires, screws, straps, clips, nuts, or washers used to complete a path to ground are removed for service, they must be returned to their original position and properly fastened.

WHAT TO DO IF YOU SMELL GAS:

- ***Do not try to light a match, or cigarette, or turn on any gas or electrical appliance.***
- ***Do not touch any electrical switches. Do not use any phone in your building.***
- ***Clear the room, building or area of all occupants.***
- ***Immediately call your gas supplier from a neighbor's phone. Follow the gas supplier's instructions carefully.***
- ***If you cannot reach your gas supplier, call the fire department.***

IMPORTANT

Electrostatic Discharge (ESD)
Sensitive Electronics

ESD problems are present everywhere. ESD may damage or weaken the electronic control assembly. The new control assembly may appear to work well after repair is finished, but failure may occur at a later date due to ESD stress.

- Use an anti-static wrist strap. Connect wrist strap to green ground connection point or unpainted metal in the appliance.

- OR -

Touch your finger repeatedly to a green ground connection point or unpainted metal in the appliance.

- Before removing the part from its package, touch the anti-static bag to a green ground connection point or unpainted metal in the appliance.
- Avoid touching electronic parts or terminal contacts; handle electronic control assembly by edges only.
- When repackaging failed electronic control assembly in anti-static bag, observe above instructions.

CONTENTS

1 SPECIFICATIONS

ITEM		DLE5977W DLG5988W	DLE5977B DLG5988B	DLE3777W DLG3788W	REMARK
Material & Finishes	Color	Blue White	Black	Blue White	
	Top Plate	Porcelain		Painted	
	Door Trim	Chromate + STS Deco		Blue White	
POWER SUPPLY		120V / 240V 60Hz (26A)			
ELECTRICITY CONSUMPTION	MOTOR	250W (4.5A)			AC 120V
	HEATER	5400W (22.5A)			AC 240V (ELECTRIC TYPE)
	LAMP	15W (125mA)			AC 120V
	GAS VALVE	13W (110mA) X 2			AC 120V (GAS TYPE)
CONTROL TYPE		Electronic			
DRUM CAPACITY		7.3 cu.ft.			
Weight (lbs): Net / Gross		126 / 144			
No. of Programs		9		7	
No. of Dry Option		5		5	
No. of Temperature Controls		5		5	
No. of Dry Levels		5		5	
Audible End of Cycle Beeper		High / Low / Off			
Sensor	Moisture	Equipped			Electro sensor
	Temperature	Equipped			Thermistor
Reversible Door		Adopted			
Drum		Stainless Steel			
Dryer Rack		Equipped			
Child Lock		Equipped			
Interior Light		Equipped			
Product (WXHXD)		27" x 42 $^{3}/_{4}$" x 28 $^{1}/_{3}$"			
Packing (WXHXD)		29 $^{1}/_{2}$" x 44 $^{3}/_{4}$" x 30 $^{3}/_{4}$"			

2 FEATURES AND BENEFITS

DLE5977W/DLG5988W/DLE5977B/DLG5988B

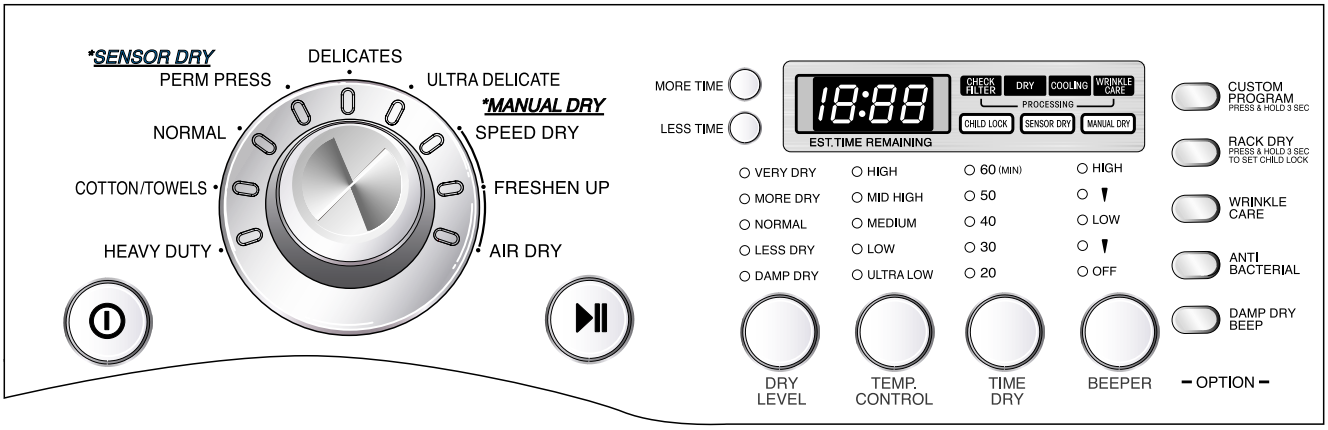

DLE3777W/DLG3788W

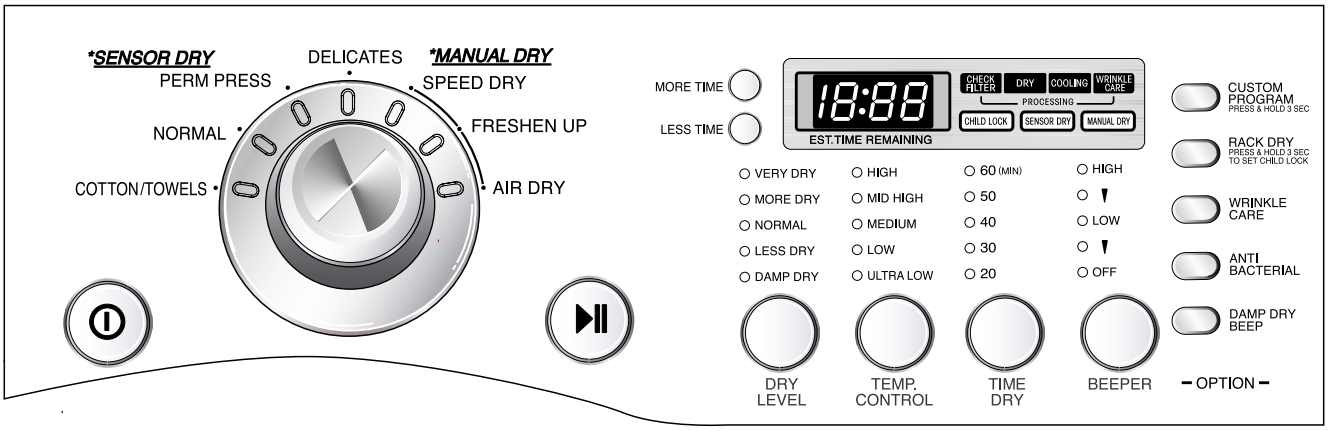

3 INSTALLATION INSTRUCTIONS

Review the following options to determine the appropriate electrical connection for your home:

3-wire receptacle (NEMA type10-30R)

Use the instructions at this section if your home has a 3-wire receptacle (NEMA type 10-30R) and you will be using a UL listed, 120/240 volt minimum, 30 amp, dryer power supply cord.

4-wire receptacle (NEMA type14-30R)

Use the instructions at this section if your home has a 4-wire receptacle (NEMA type 14-30R) and you will be using a UL listed, 120/240 volt minimum, 30 amp, dryer power supply cord.

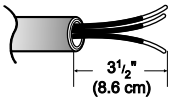

3 wire direct

If this type is available at your home. you will be connecting to a fused disconnect or circuit breaker box

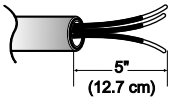

4 wire direct

If this type is available at your home. you will be connecting to a fused disconnect or circuit breaker box

4-wire connection : Direct wire

Important : The places where a 4-wire connection is needed are , for example, mobile homes and areas that local codes do not admit the use of 3-wire connections.

At least, 5ft(1.52m) of extra length is required in order for dryer to be able to be moved.

Peel 5 in (12.7cm) of external covering from end

of cable, leaving bare ground wire at 5 in (12.7cm). Cut 1 1/2 in. (3.8cm) from 3 remaining wires. Peel insulation back 1in. (2.5cm). Shape ends of wires like a hook.

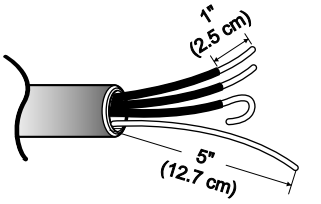

Then, put the hooked shape end of the wire under the screw of the terminal block(hooked end facing rightward) and pinch the hook together and screw tightly.

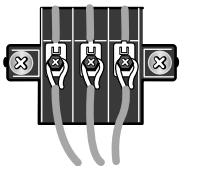

1. Take off center terminal block screw
2. Take off appliance neutral ground wire(white) from external ground connector screw. Fasten it under center, silver colored terminal block screw.
3. Connect ground wire(green) of power supply cable to external ground conductor screw. Tighten screw.

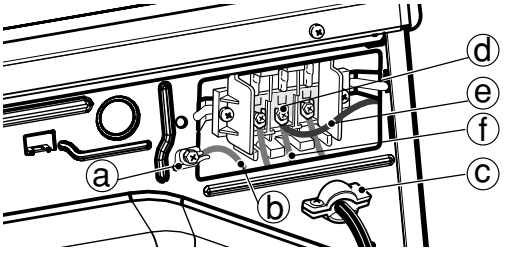

a. External ground connector
b. Green copper wire of power supply cord
c. 3/4 in. (1.9cm) UL-listed strain relief
d. Center silver-colored terminal block screw
e. Neutral grounding wire(white)
f. Neutral wire(white or center wire)

4. Put the hooked shape ends of the wire under the screw of the terminal block(hooked end facing rightward) and squeeze the hook together and screw tightly.
5. Put the hooked shaped ends of the other power supply cable wires under the outer terminal block screws(hooked end facing right) and squeeze the hooked ends together and screw tightly.

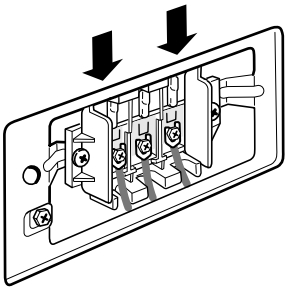

6. Tighten strain relief screws.
7. Place the tab of terminal block cover into slot of dryer rear panel. Make sure cover with screw.

3-wire connection : Direct wire

Important : The places wherea 4-wire connection is needed are mobile homes and areas that local codes do not admit the use of 3-wire connections.

At least, 5ft(1.52m) of extra length is required for dryer to be able to move.

Peel 5 in (12.7cm) of external covering from end

of cable, leaving bare ground wire at 5 in (12.7cm). Cut 1 1/2 in. (3.8cm) from 3 remaining wires. Strip insulation back 1in. (2.5cm). Shape ends of wires into a hook shape.

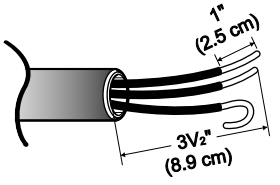

Then, put the hooked shape end of the wire under the screw of the terminal block(hooked end facing rightward) and pinch the hook together and screw tightly.

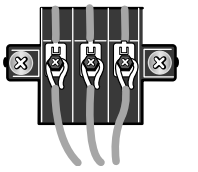

1. Take off center terminal block screw
2. Put the hooked end of the neutral wire(white) of power supply cable under the center screw of terminal block). Squeeze the hooked end together
3. Connect the hooked ends of the other power supply cable to the center screw of terminal block.
4. Screw strain relief tightly.
5. Place tab of terminal block cover into slot of dryer rear panel. Make sure cover with screw.

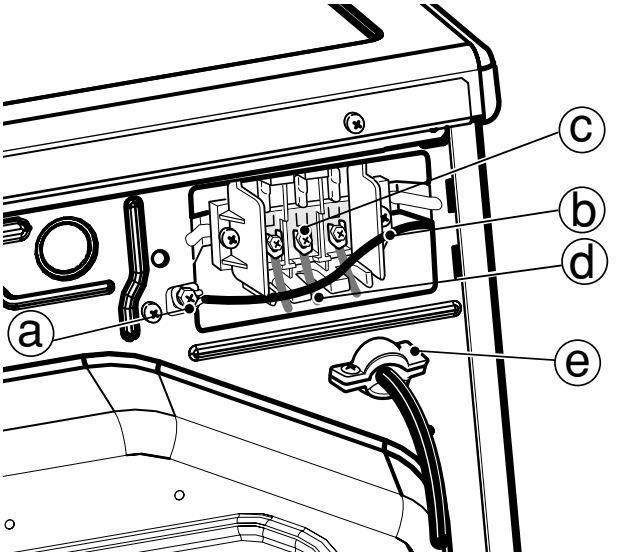

a. External ground connector
b. Neutral grounding wire (white)
c. Center silver-colored terminal block screw
d. Neutral wire (white or center wire)
e. 3/4 in. (1.9 cm) UL-listed strain relief

Option 1: 3-Wire Connection with a Power Supply Cord

lf your local codes or ordinances permit the connection of a frame-grounding conductor to the neutral wire, use these instructions. If your local codes or ordinances do not allow the connection of a frame-grounding conductor to the neutral wire, use the instructions under **Section 3: Optional 3-wire connection.**

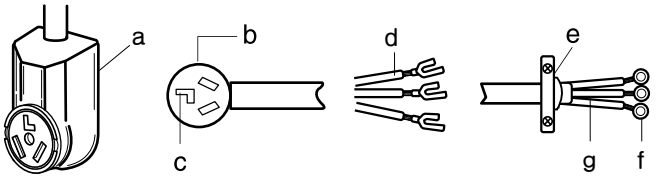

a. 3-wire receptacle (NEMA type 10-30R)
b. 3-wire plug
c. Neutral prong
d. Spade terminals with up turned ends
e. 3/4 in. (1.9 cm) UL approved strain relief
f. Ring terminals
g. Neutral (white or center wire)

1. Loosen or remove center terminal block screw.
2. Connect neutral wire (white or center wire) of power supply cord to the center, silver colored terminal screw of the terminal block. Tighten screw.

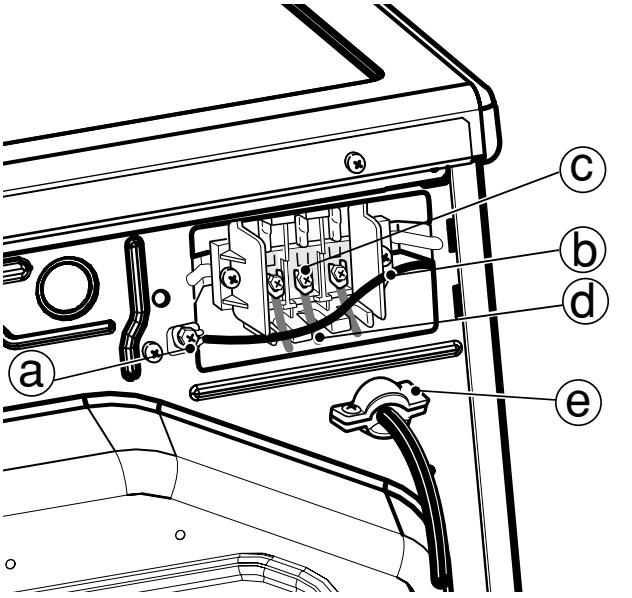

a. External ground connector
b. Neutral grounding wire (white)
c. Center silver-colored terminal block screw
d. Neutral wire (white or center wire)
e. 3/4 in. (1.9 cm) UL-listed strain relief

3. Connect the other wires to outer terminal block screws. Tighten screws.
4. Tighten strain relief screws.
5. Insert tab of terminal block cover into slot of dryer rear panel. Secure cover with hold-down screw.

Option 2: 4-wire connection with a Power supply cord.

• If your local codes or ordinances do not allow the use of a 3 wire connection, or you are installing your dryer in a mobile home, you must use a 4-wire connection.

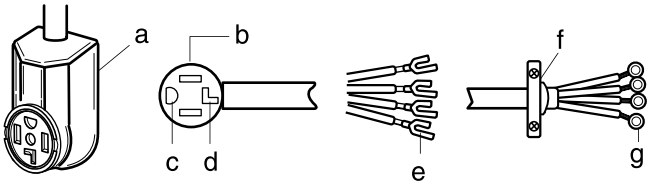

a. 4-wire receptable (NEMA type 14-30R)
b. 4-pront plug
c. Ground prong
d. Neutral Prong
e. Spade terminals with upturned ends
f. 3/4 in. (1.9 cm) UL approved strain relief
g. Ring terminals

1. Remove center terminal block screw.
2. Remove appliance neutral ground wire (white) from external ground connector screw. Fasten it under the center, silver colored terminal block screw.

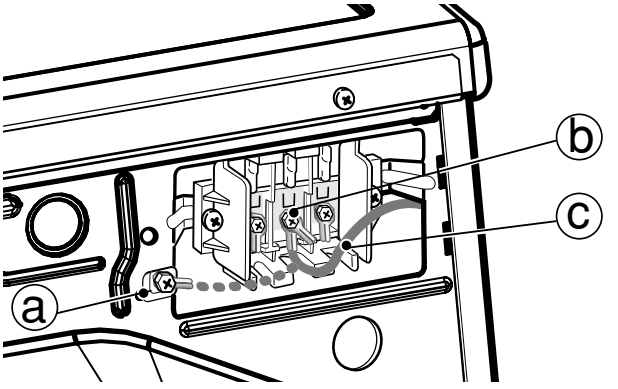

a. External ground connector - Dotted line shows position of NEUTRAL ground wire before being moved to center terminal block screw
b. Center silver-colored terminal block screw
c. White wire of harness

3. Connect ground wire (green or bare) of power supply cable to external ground conductor screw. Tighten screw.
4. Connect neutral wire (white or center wire) of power supply cord to the center, silver colored terminal screw of the terminal block.

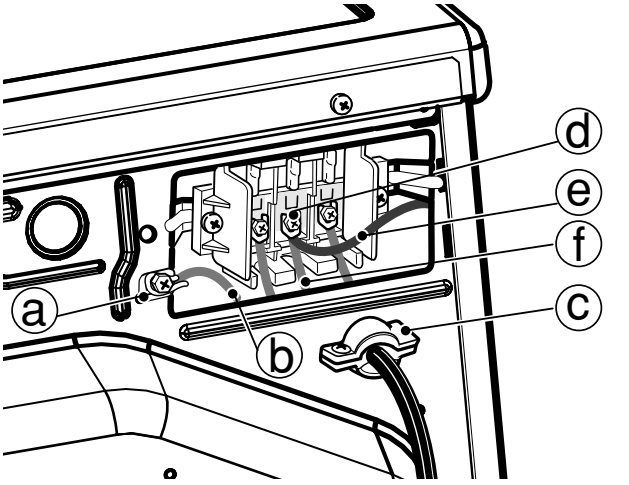

a. External ground connector
b. Green or bare copper wire of power supply cord
c. 3/4 in. (1.9 cm) UL-listed strain relief
d. Center silver-colored terminal block screw
e. Neutral grounding wire (white)
f. Neutral wire (white)

5. Connect the other wires to outer terminal block screws. Tighten screws.
6. Tighten strain relief screws.
7. Insert tab of terminal block cover into slot of dryer rear panel. Secure cover with hold-down screw.

Option 3: Optional 3-wire connection.

- If your local codes or ordinances do not allow the connection of a frame-grounding conductor to the neutral wire, use the instructions under this section.

1. Remove center terminal block screw.
2. Remove appliance neutral ground wire (white) from external ground connector screw. Connect appliance ground wire and the neutral wire (white or center wire) of power supply cord/cable under center, silver colored terminal block screw. Tighten screw.
3. Connect the other wires to outer terminal block screws. Tighten screws.

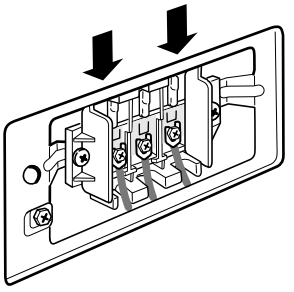

4. Tighten strain relief screws.
5. Insert tab of terminal block cover into slot of dryer rear panel. Secure cover with hold-down screw.
6. Connect a separate copper ground wire from the external ground connector screw to an adequate ground.

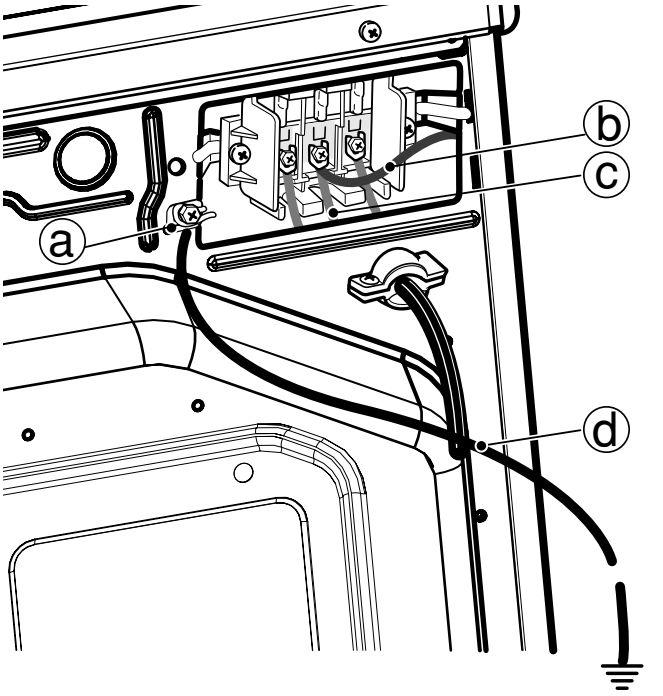

a. External ground connector
b. Neutral grounding wire (white)
c. Neutral wire (white or center wire)
d. Grounding path determined by a qualified electrician

3-2. Connect Gas Supply Pipe (Gas Dryer ONLY)

For further assistance, refer to section on ***Gas Requirements.***

1. Make certain your dryer is equipped for use with the type of gas in your laundry room. Dryer is equipped at the factory for Natural Gas with a 3/8” N.P.T. gas connection.
2. Remove the shipping cap from the gas connection at the rear of the dryer. Make sure you do not damage the pipe thread when removing the cap.
3. Connect to gas supply pipe using a new flexible stainless steel connector.
4. Tighten all connections securely. Turn on gas and check all pipe connections (internal & external) for gas leaks with a non-corrosive leak detection fluid.
5. For L.P. (Liquefied Petroleum) gas connection, refer to section on Gas Requirements.

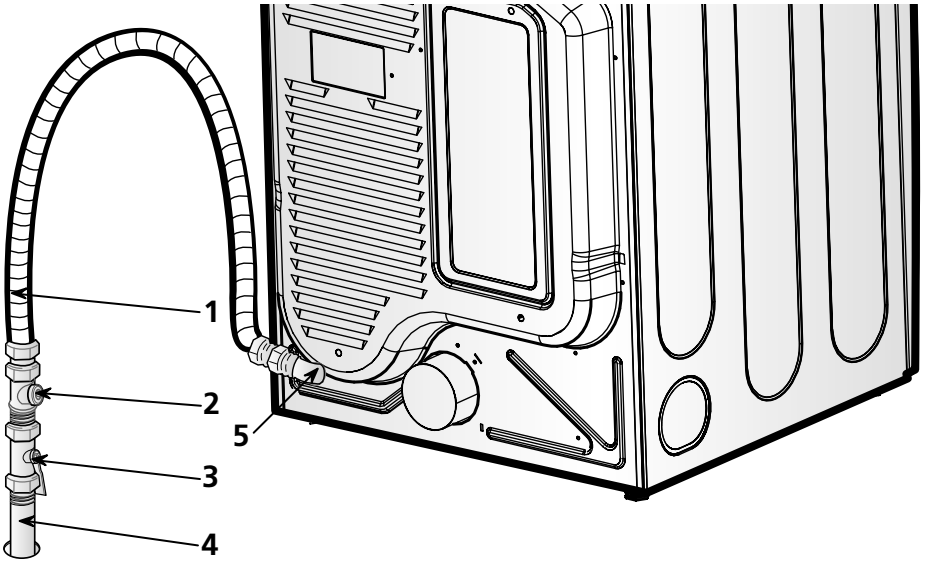

1 New Stainless Steel Flexible Connector - Use only if allowed by local codes (Use Design A.G.A. Certified Connector)

2 1/8″ N.P.T. Pipe Plug (for checking inlet gas pressure)

3 Equipment Shut-Off Valve-Installed within 6′ (1.8 m) of dryer

4 Black Iron Pipe
Shorter than 20′ (6.1 m) - Use 3/8″ pipe
Longer than 20′ (6.1 m) - Use 1/2″ pipe

5 3/8″ N.P.T. Gas Connection

4 DRYER CYCLE PROCESS

Cycle		Default			Conditions of operation and termination				
		Temp-erature	Dry Level	Display time	Drying		Cooling		Wrinkle care
					Electro-sensor	Temp-Control	Default time	Temp-Control**	Time
Sensor Dry *	HEAVY DUTY	HIGH	(Normal)	54min	Saturation	68±4°C	(5min)	47±5°C	3Hr
	COTTON/ TOWELS	MID HIGH	(Normal)	55min	Saturation	66±4°C	(5min)	47±5°C	
	NORMAL	MEDIUM	(Normal)	41min	Saturation	60±4°C	(5min)	47±5°C	
	PERM PRESS	LOW	(Normal)	36min	Saturation	52±3°C	(5min)	47±5°C	
	DELICATES	LOW	(Normal)	32min	Saturation	52±3°C	(5min)	38±5°C	
	ULTRA DELICATE	ULTRA LOW	(Normal)	34min	Saturation	45±3°C	(5min)	38±5°C	
Manual Dry **	SPEED DRY	(HIGH)	–	25min	Saturation	(70±5°C)	(5min)	(47±5°C)	3Hr
	FRESHEN UP	(MID HIGH)	–	20min	Saturation	(66±5°C)	(5min)	(47±5°C)	
	AIR DRY	–	–	30min	Saturation	No heater	N/A	N/A	
Load			Motor		→				Off Time: 6min → On Time: 10sec
			Heater		Temperature Control for each cycle →				

* Sensor dry : “Dry Level” is set by users.

** Manual dry : “Temperature control” is set by users.

Default settings can be adjusted by users.

5 COMPONENT TESTING INFORMATION

⚠ CAUTION *When checking the Component, be sure to turn the power off, and do voltage discharge sufficiently.*

Component	Test Procedure	Check result	Remark
1. Thermal cut off • Check Top Marking : N130	Measure resistance of terminal to terminal ① Open at 266 ± 12°F (130 ± 7°C) ② Auto reset -31°F (-35°C) Same shape as Outlet Thermostat.	If thermal fuse is open must be replaced ① Resistance value ≒ ∞ ② Continuity (250°F ↓) < 1Ω	• Heater case-Safety • Electric type
2. Hi limit Thermostat (Auto reset)	Measure resistance of terminal to terminal ① Open at 257 ± 9°F (125 ± 5°C) ② Close at 221 ± 9°F (105 ± 5°C)	① Resistance value ≒ ∞ ② Resistance value < 5Ω	• Heater case - Hi limit • Electric type
3. Outlet Thermostat (Auto reset) • Check Top Marking : N85	Measure resistance of terminal to terminal ① Open at 185 ± 9°F (85 ± 5°C) ② Close at 149 ± 9°F (65 ± 5°C) Same shape as Thermal cut off.	① Resistance value ≒ ∞ ② Resistance value < 5Ω	• Blow housing - Safety • Electric type
4. Lamp holder	Measure resistance of terminal to terminal	Resistance value : 80Ω ~ 100Ω	
5. Door switch	Measure resistance of the following terminal 1) Door switch knob : open ① Terminal : "COM" - "NC" (1-3) ② Terminal : "COM" - "NO" (1-2) 2) Door switch push : push ① Terminal : "COM" - "NC" (1-3) ② Terminal : "COM" - "NO" (1-2)	① Resistance value < 1Ω ② Resistance value ≒ ∞ ① Resistance value ≒ ∞ ② Resistance value < 1Ω	The state that Knob is pressed is opposite to Open condition.
6. Idler switch	Measure resistance of the following terminal : "COM - NC"	1. lever open ① Resistance value < 1Ω 2. Lever push (close) ② Resistance value ≒ ∞	

Component	Test Procedure	Check result	Remark
7. Heater 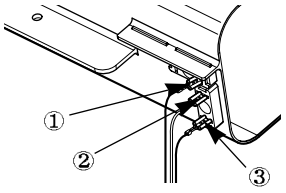 	Measure resistance of the following terminal ① Terminal : 1 (COM) - 2 ② Terminal : 1 (COM) - 3 ③ Terminal : 2 - 3	① Resistance value : 10Ω ② Resistance value : 10Ω ③ Resistance value : 20Ω	• Electric type
8. Thermistor 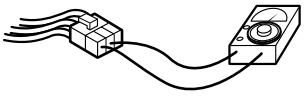	Measure resistance of terminal to terminal Temperature condition : 58°F ~ (10~40°C) 58°F ~ 104F (10~40°C)	Resistance value : 10Ω	• Heater case - Hi limit • Electric type
9. Motor			• See Page 13
10. Gas valve 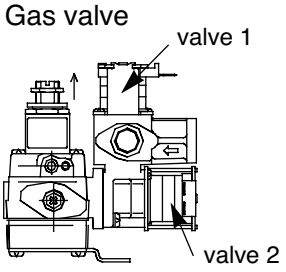 	Measure resistance of the following terminal ① Valve 1 terminal ② Valve 2 terminal	① Resistance value : > 1.5kg ~ ② Resistance value : > 1.5~2.5kg	• Gas type
11. Igniter 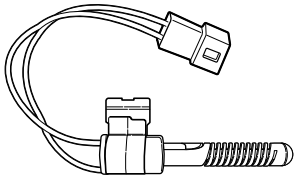	Measure resistance of terminal to terminal	Resistance value : 100~800Ω	• Gas type
12. Frame Detect 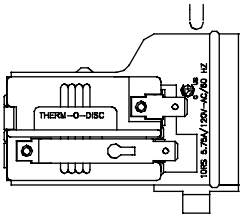 	Measure resistance of terminal to terminal ① Open at 370°F ((Maximum) ② Close at 320°F	① Resistance value ≒ ∞ ② Resistance value < 1Ω	• Gas type

Component	Test Procedure	Check result	Remark
13. Outlet Thermostat (Auto reset) 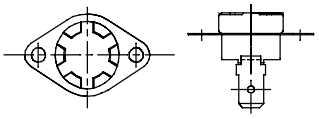 • Check Top Marking : N95	Measure resistance of terminal to terminal ① Open at 203 ± 7°F (95 ± 5°C) ② Close at 158 ± 9°F (70 ± 5°C)	① Resistance value ≒ ∞ ② Continuity < 1Ω	• Gas type • Gas funnel
13. Outlet Thermostat (Manual reset) 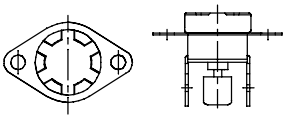 • Check Top Marking : N100	Measure resistance of terminal to terminal ① Open at 212 ± 12°F (100 ± 7°C) ② Manual reset	If thermal fuse is open must be replaced ① Resistance value ≒ ∞ ② Continuity < 1Ω	• Gas type • Gas funnel

6 MOTOR DIAGRAM AND SCHEMATIC

NOTE ***When checking Component, be sure to turn Power off, then do voltage discharge sufficiently.***

■ Contact On / Off by Centrifugal Switch

Terminal No		①	②	③	④	⑤	⑥	Remark
Mode	**Resistance**							
Motor STOP	2 ~ 3Ω				●	●		Motor
	≒ ∞	●	●					Heater (Electric Models)
	≒ ∞			●			●	Gas Valve (Gas Models)
Motor RUN	3 ~ 5Ω				●	●		Motor
	< 1Ω	●	●					Heater (Electric Models)
	< 1Ω			●			●	Gas Valve (Gas Models)

Open
Close

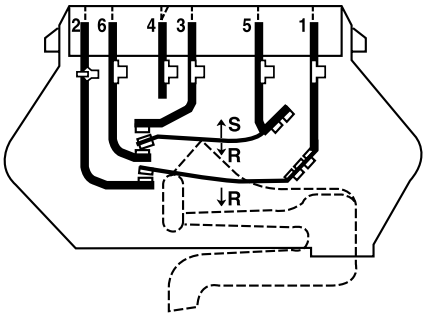

SWITCH SHOWN IN START POSITION

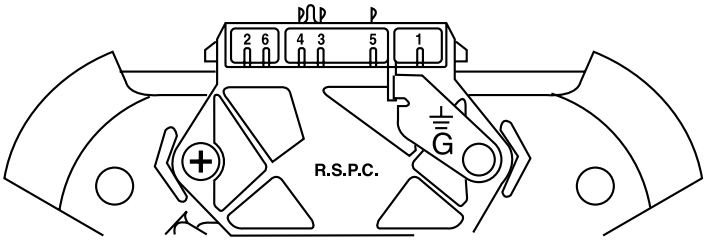

■ STOP MODE
(When Motor does not operate)

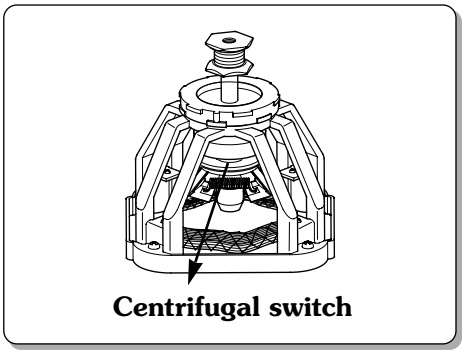

■ RUN MODE
(Motor operates)

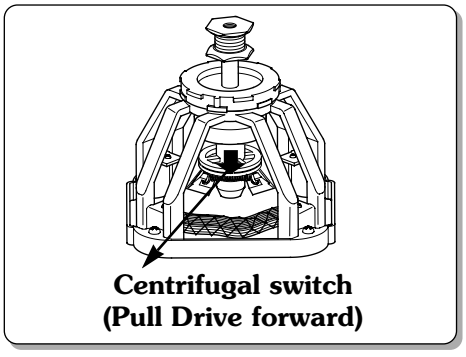

7 CONTROL LAY - OUT

PWB ASSEMBLY DISPLAY LAY-OUT

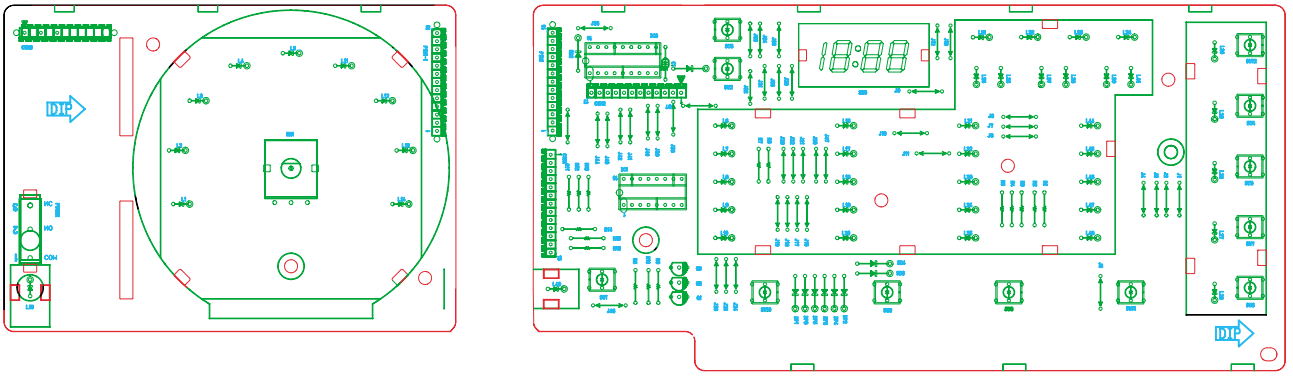

※ MODEL DISPLAY AS DIAGNOSTIC TEST

MODEL	OPTION PART						LED DISPLAY	P/No
	OP 1	OP 2	OP 3	OP 4	OP 5	OP 6		
DLE5977W/B	X	X	X	O	X	X	18:FO	6871EC1115A
DLG5988W/B	X	X	O	O	X	X	19:FO	6871EC1115B
DLE3777W	X	X	X	X	X	X	18:F1	6871EC1115C
DLG3788W	X	X	O	X	X	X	19:F1	6871EC1115D

PWB ASSEMBLY LAY-OUT

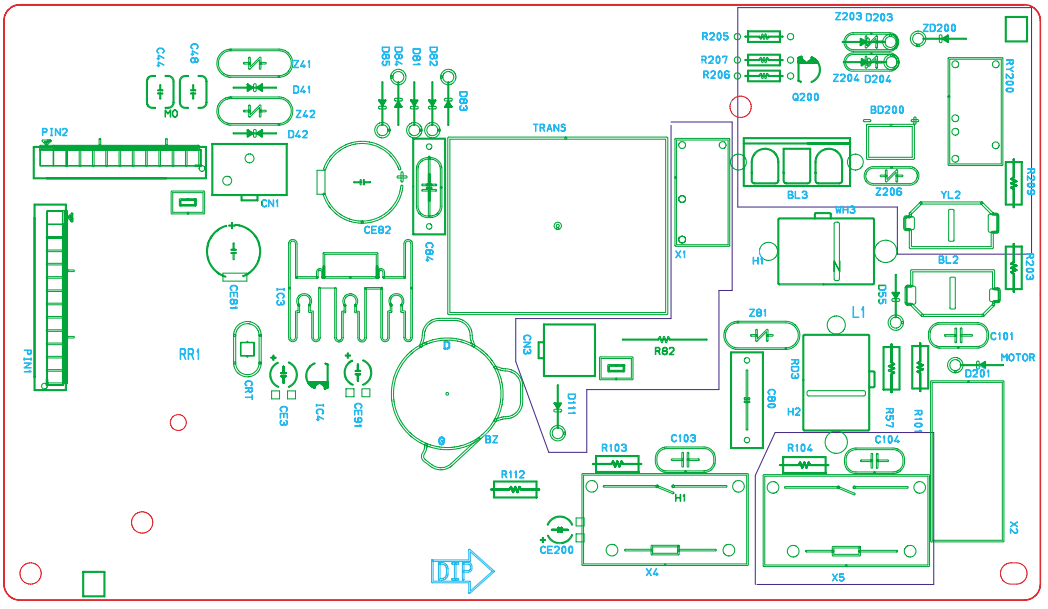

8 WIRING DIAGRAM

ELECTRIC DRYER WIRING DIAGRAM

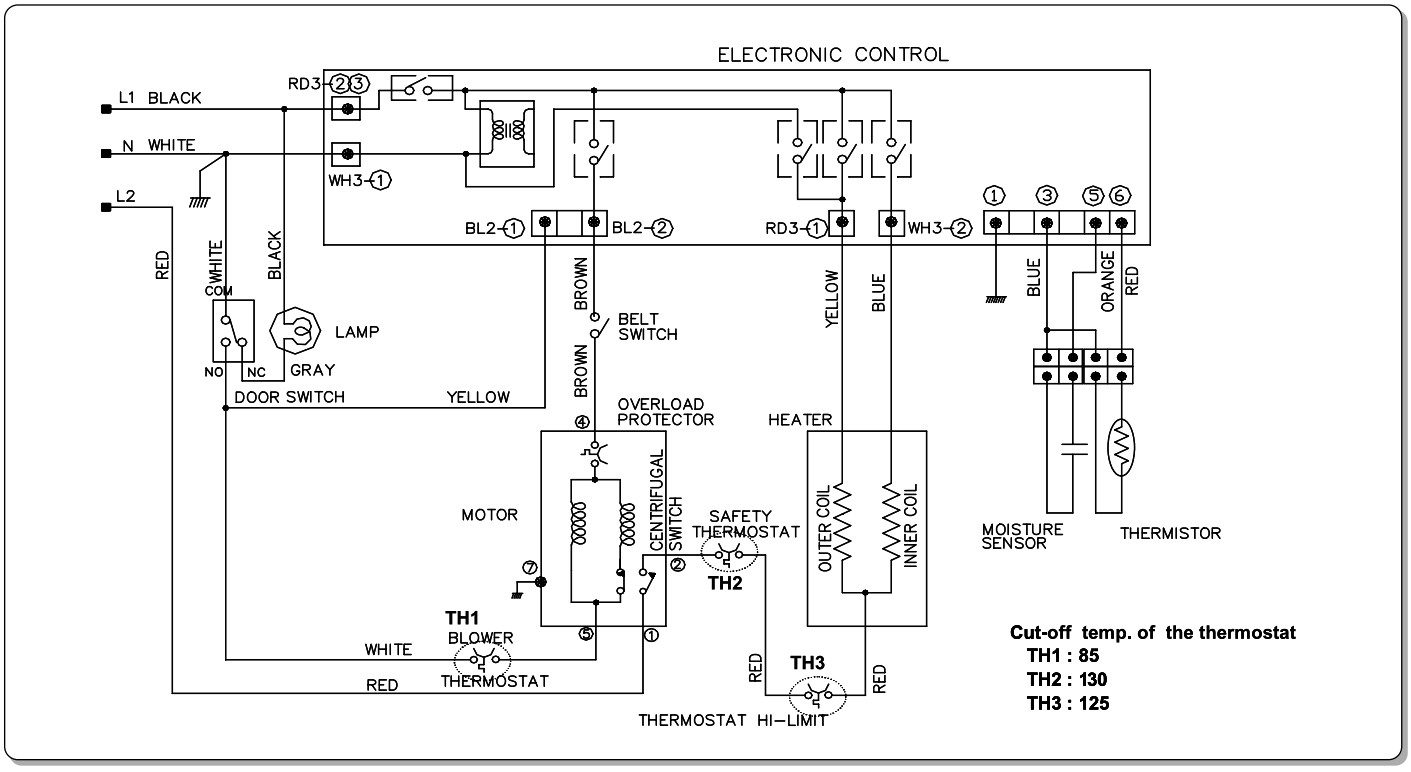

GAS DRYER WIRING DIAGRAM

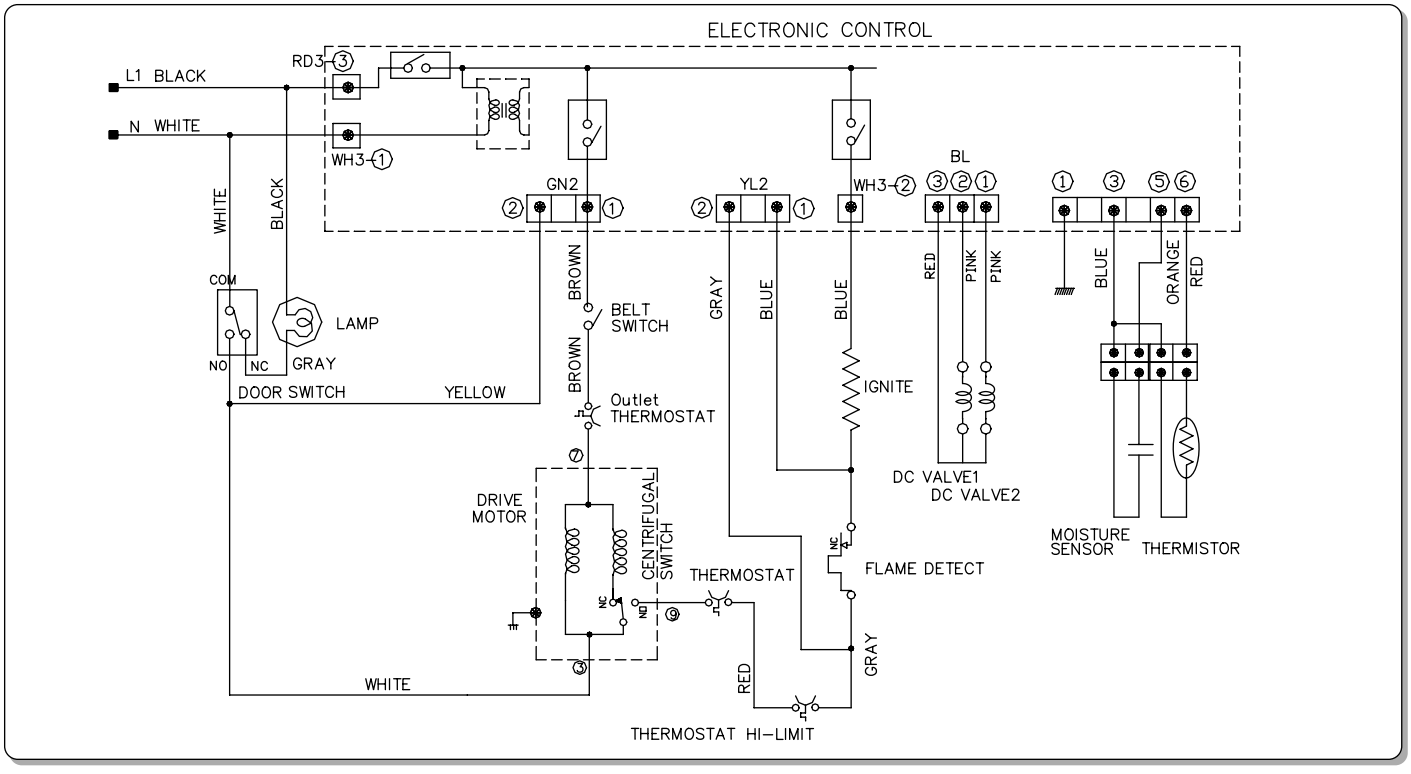

9 DIAGNOSTIC TEST

1. This TEST should be used for Factory test /Service test. Do not use this DIAGNOSTIC TEST other than specified.

2. Activating the Heater manually with the Door open may trip the Thermostat attached to the Heater, therefore do not activate it manually. (Do not press the door switch to operate the heater while the door is open)

■ ACTIVATING THE DIAGNOSTIC TEST MODE

1. Unit must be in Standby (unit plugged in, display off)
2. Press "**POWER**" while pressing "**MORE TIME**", and "**LESS TIME**" simultaneously.

Pressing the "START/PAUSE" button	CHECKING ACTION	DISPLAY	CHECKING POINT	REMARK
None	Electric control & Temperature sensor	18:F0	Won't power up Defective LED	See test 1 Display : See page
		tE1	Thermistor open	See test 2
		tE2	Thermistor close	
Once	Motor	70 ~ 239 Measured Moisture Value.	Motor runs	See test 3
			Displays Moisture Sensor Operation: If moisture sensor is contacted with damp cloth. The display number is below 180, in normal condition.	See test 4
Twice	■ ELECTRIC TYPE Motor + Heater 1 (2700W) ■ GAS TYPE Motor + Valve	Current Temp.	■ ELECTRIC TYPE : Heater runs ■ GAS TYPE : GAS Valve runs (Display the Temperature of Inside drum.)	Gas valve See test 7
3 times	■ ELECTRIC TYPE Motor + Heater 1 +Heater 2 (5400W) ■ GAS TYPE Motor Type	Current Temp. (5 ~ 70)		
4 times	Control Off		Auto Off	
During check, If the door is open.	Motor & Heater Off + Lamp On + Buzzer beeps seven times	dE	Door switch	See test 6
			Lamp	
During check, If the door is closed.	Motor on & Heater Off + Lamp Off	70 ~ 239	• Press Start button 1 time and then open the door. Proceed again with the step 1(by pressing start 1 time), step 2(by pressing start 2 times), step 3(by pressing start 3 times) and step 4(by pressing start 4 times) in sequence. • Press Start 2 times and then open the door. Proceed again from the step 1 all the way to the step 4. • Press Start 3 times and then open the door Proceed with the step 1 and skip the step 2 and press step 3 twice and finish with step 4 by making sure the all the electric devices shut off in the end.	

■ Test 1 120VAC Electrical supply

Caution	When measuring power, be sure to wear insulated gloves, to and avoid an electric shock.
Trouble Symptom	No power was applied to Controller. (LED, Display off)
Measurement Condition	With Dryer Power On; Connector linked to Controller.

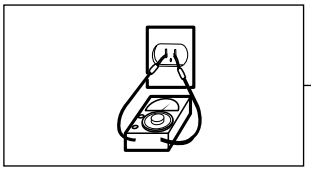

Check the outlet, is the voltage 110V ~ 125V AC?

NO → • Check the fuse or circuit breaker.

YES ↓

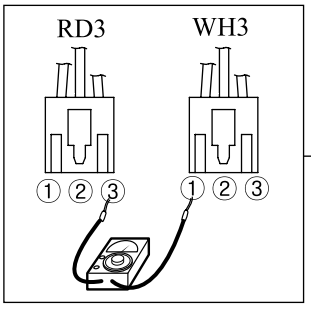

Check if the voltage measured between Connector “RD3-③” (Black) linked to the Controller and “WH3-①”(White) is 110V ~ 125V?

NO → • Check if Power Cord is properly connected.

YES ↓

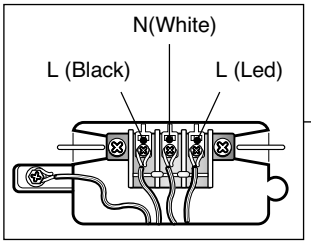

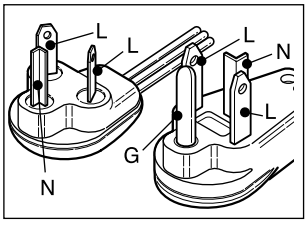

① Check if the Controller wire is disconnected.
② Check if Terminal Block and Power Cord are connected (Check Plug).
- Does Power Cord N(Natural) line match to Terminal Center N(Natural) line?

NO → • Reconnect the controller.

YES ↓

Replace controller.

■ Test 2 Thermistor Test --- Measure with Power Off

Caution	Before measuring resistance, be sure to turn Power off, and do voltage discharge. (When discharging, contact the metal plug of Power cord with the Ground.)
Trouble Symptom	① During Diagnostic Test, tE1 and tE2 Error occur. ② During operation, Heater would not turn off, or remains on. ③ Difference between actual and sensed temperature is significant.
Measurement Condition	After turning Power off, measure the resistance.

Take 6pin Connector from the Controller.

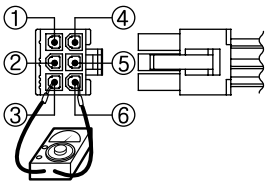

Check if resistance is in the range of Table 1 when measuring 6pin connector Pin ③ (Blue wire) and Pin ⑥ (Red wire) connected to Controller.

YES →
- Check if Control and 6Pin connector is properly connected.
- Replace Controller.

NO ↓

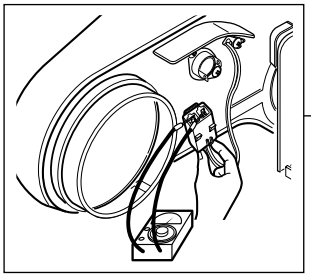

Check if resistance is in the range of Table 1 when measuring resistance between terminals after separating Harness From Thermistor assembly Connector.

NO →
- Replace Thermistor.

YES ↓

Check Harness-linking connector.

■ Table 1. Resistance for Thermistor Temperature.

Air TEMP.[°F (°C)]	RES. [kΩ]	Air TEMP.[°F (°C)]	RES. [kΩ]	Air TEMP.[°F (°C)]	RES. [kΩ]
50°F (10°C)	18.0	90°F (32°C)	7.7	130°F (54°C)	2.9
60°F (16°C)	14.2	100°F (38°C)	6.2	140°F (60°C)	3.0
70°F (21°C)	11.7	110°F (43°C)	5.2	150°F (66°C)	2.5
80°F (27°C)	9.3	120°F (49°C)	4.3	160°F (71°C)	2.2

■ Test 3 Motor test

Caution	Before measuring resistance, be sure to turn Power off, and do voltage discharge. (When discharging, contact the metal plug of Power cord with earth line.)
Trouble Symptom	Drum will not rotate; No fan will function; No Heater will work.
Measurement Condition	Turn the Dryer's Power Off, then measure resistance.

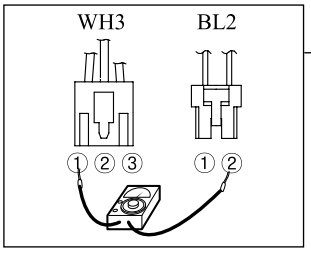

Is resistance below 3Ω between Connector "WH3-①" (White wire) and "BL2-②" (Brown wire)?
※ Measure while door is closed.

YES →
- Replace Control. (Relay check)
- Check Controller connector.

NO ↓

Is resistance below 3Ω between Connector "WH3-①" (White wire) and "BL2-①" (Yellow wire)?
※ Measure while door is closed.

NO →
- Check if Door flame presses door switch knob.
- Check Door Switch.
- Check Harness connection.

YES ↓

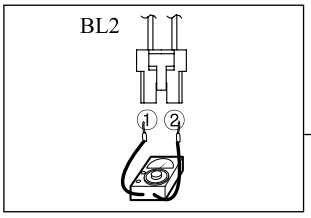

Is resistance below 3Ω between Connector "BL2-①" (Yellow wire) and "BL2-②" (Brown wire)?

YES →
- Replace Control. (Relay check)
- Check Controller connector.

NO ↓

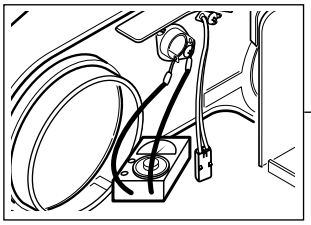

Is resistance below 1Ω between terminals of Outlet Thermostat attached to blower housing?

NO →
- Replace Outlet
- Thermostat. (Refer to 'Component')

YES ↓

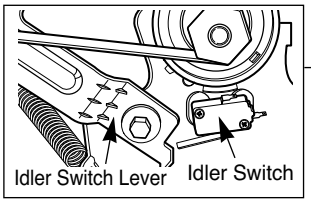

Does Idle Switch attached to Motor Bracket operate Level by drum belt?
(Not operating Lever is normal.)

YES →
- Check Idler Assembly.
- Drum Belt cuts off
- Drum Belt takes off from
- Motor Pulley.

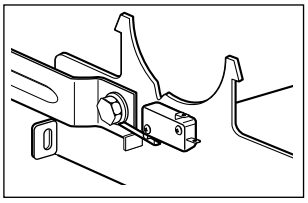

Is resistance below 1Ω between Idler Switch terminals?

NO →
- Replace Idler Switch.

YES ↓

- Check Motor.(Refer to 'Motor Diagram & Check')
- Check if Control Connector is contacted.

■ Test 4 Moisture sensor

Caution	Before measuring resistance, be sure to turn Power off, and do voltage discharge. (When discharging, contact the metal plug of Power cord with earth line.)
Trouble Symptom	Degree of dryness does not match with Dry Level.
Measurement Condition	Turn the Dryer's Power Off, then measure resistance.

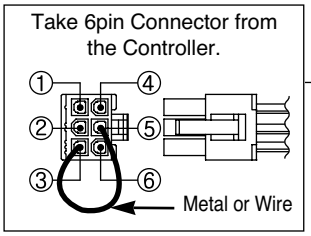

Short with metal to 6pin connector's Pin ③ (BLUE wire) and Pin ⑤ (ORANGE wire) to Controller.

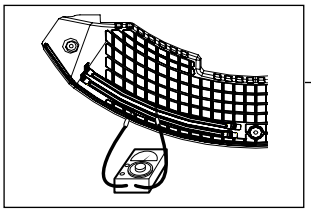

When measuring resistance in Electric load, is resistance below 1Ω?

NO →
- Check Electro Load and
- Harness Connector.
- Check Harness-linking connector.

YES ↓

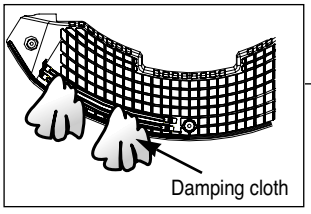

When contacting cloth to Electro load:
1. Is the measurement within the range of Table 2 during Diagnostic Test?
2. Is the measurement within the range of Table 2 when measuring the voltage in 6pin connector's Pin ③ (BLUE wire) and Pin ⑤ (ORANGE wire)?

NO →
- Replace Control and Check.

YES ↓

Normal Condition

■ Table 2. IMC Ratio and Display Value / Voltage (IMC : Initial Moisture Content)

IMC	Display Value	Voltage(DC) (between 6Pin terminal ③,⑤)	Remark
70% ~ 40%	50 ~ 130	2.5V	Weight after removing from Washing Machine
40% ~ 20%	100 ~ 20	2.0V ~ 4.0V	Damp Dry
10% ~ Dried clothes	205 ~ 240	Over 4.0V	Completely-dried clothes

■ Test 5 Door switch test

Caution	Before measuring resistance, be sure to turn Power off, and do voltage discharge. (When discharging, contact the metal plug of Power cord with earth line.)
Trouble Symptom	Door Opening is not sensed.(During operation, when opening Door, Drum motor and Heater run continuously; Door Close is not sensed. (Drum motor will not operate. Display will flash at 0.5 second intervals.)
Measurement Condition	After turning Dryer Power Off, measure resistance.

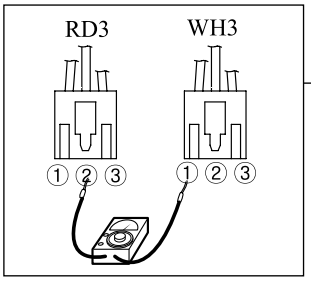

Measure while Door is closed. Check if resistance is below 250Ω between "WH3-①" (White wire) and "RD3-②"(Black wire) Connector WH3, RD3 after taking WH3, RD3 out from Controller.

YES → • Door switch Check (Refer to Component testing.)

NO ↓

Measure while Door is open. Check if resistance is 300~60Ω between "WH3-①" (White wire) and "RD3-②" (Black wire) Connector WH3, RD3 after taking WH3, RD3 out from Controller.

NO → • Check Lamp. (When opening Lamp, replace then measure again.) • Door switch Check(Refer to Component testing.)

YES ↓

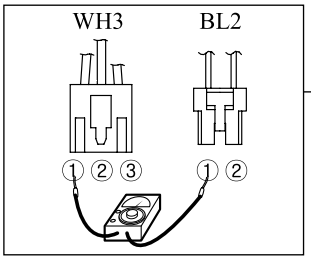

Measure while Door is open. Check if resistance is below 1Ω between "BL2-①" (Yellow wire) and "WH3-①" (White wire) after taking Connector WH3, BL2 out from Controller.

YES → • Door switch Check (Refer to Component testing.)

NO ↓

Measure while Door is closed. Check if resistance is below 1Ω between "BL2-①" (Yellow wire) and "WH3-①" (White wire) after taking Connector WH3, BL2 out from Controller.

NO → • Door switch Check (Refer to Component testing.)

YES ↓

Check Controller.
Check Harness-linking connector.

■ Test 6 Heater switch test - Electric Type

Caution	Before measuring resistance, be sure to turn Power off, and do voltage discharge. (When discharging, contact the metal plug of Power cord with earth line.)
Trouble Symptom	While operating, Heating will not work. Drying time takes longer.
Measurement Condition	After turning Power off, measure the resistance.

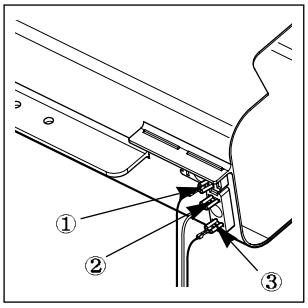

1. Is resistance between Heater terminal ① and ② below 18 ~ 22Ω?
2. Is resistance between Heater terminal ① and ③ below 18 ~ 22Ω?
3. Is resistance between Heater terminal ② and ③ below 9 ~ 11Ω?

NO → • Replace Heater.

YES ↓

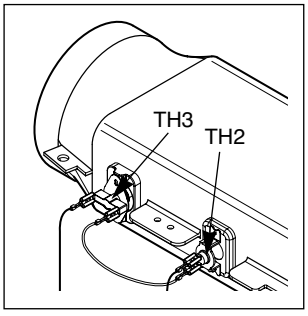

Check if the value of measured resistance is below 1Ω between terminal TH2 (Safety Thermostat).

NO → • Replace TH2 (Safety Thermostat).

YES ↓

Check if the value of measured resistance is below 1Ω between terminal TH3 (HI-Limit Thermostat).

NO → • Replace TH3 (HI-Limit Thermostat).

YES ↓

Check Motor. Check if the value of measured resistance is below 1Ω between terminal ① and ⑩ at RUN condition.

NO → • Check Motor and replace it.

YES ↓

Check Controller.
Check Harness-linking Connector.

■ Test 7 GAS Valve test - Gas Type

Caution	When measuring power, be sure to wear insulated gloves, to avoid electric shock.
Trouble Symptom	While operating, Heating will not work. Drying time takes longer.
Measurement Condition	With dryer power on

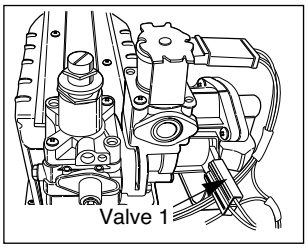

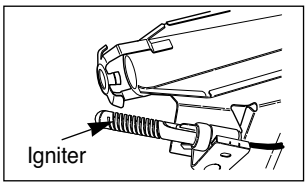

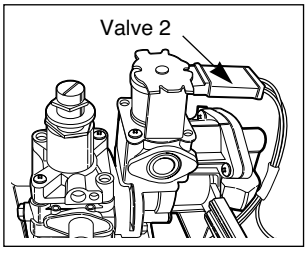

Power On & Start (Normal Cycle)

NO

When measuring Valve 1 voltage, More than AC 90V? — **NO** → • Check thermostat Hi limit Safety

YES

Igniter operates? (after 1 min, Igniter becomes reddish) — **NO** → • Check Igniter & Frame detect

YES

When measuring Valve 2 voltage, Value is more than AC 90V? (10 sec after Igniter off) — **YES** → • Check Gas connection or Gas supply

NO

When measuring terminal resistance on “Valve 1”, “Valve 2”, Value is more than1.5 ~ 2.5kΩ? (Measure after Off) — **YES** → • Change Valve

NO

• Harness check
• Controller change

10 CHANGE GAS SETTING (NATURAL GAS, PROPANE GAS)

⚠ Warning ***After Natural Gas Setting, applying Propane Gas Orifice or wrong use of Natural Gas Orifice will result in fire. Conversion must be made by a qualified technician.***

Initially, Natural Gas mode is set. Propane Gas Orifice is on sale as a Service Part to authorized servicers only.

STEP 1 : VALVE SETTING

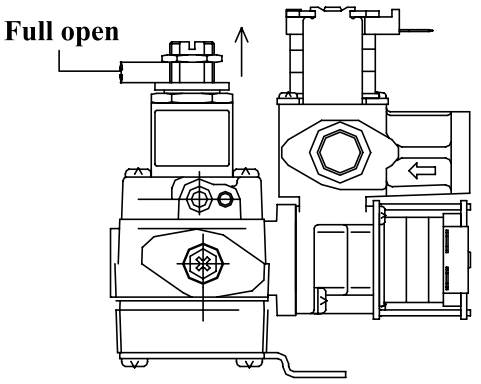

NATURAL GAS SETTING

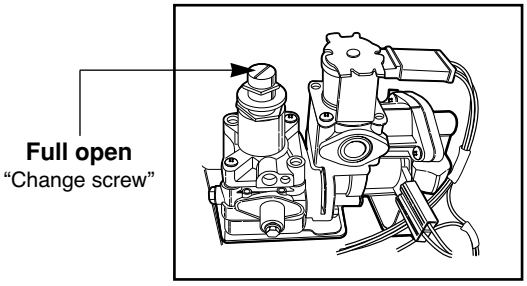

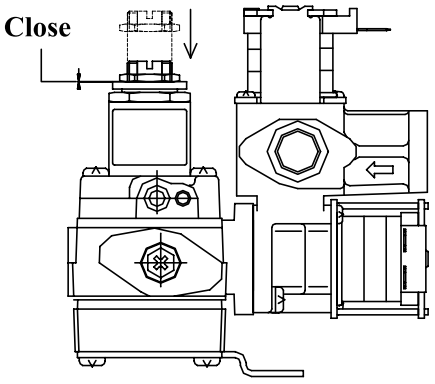

PROPANE GAS SETTING

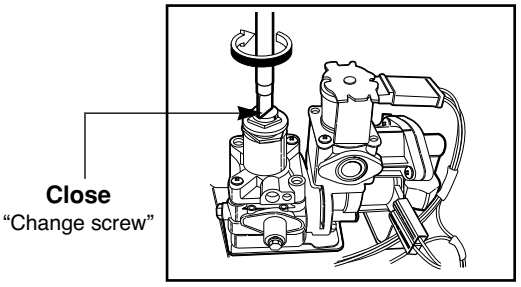

STEP 2 : ORIFICE CHANGE

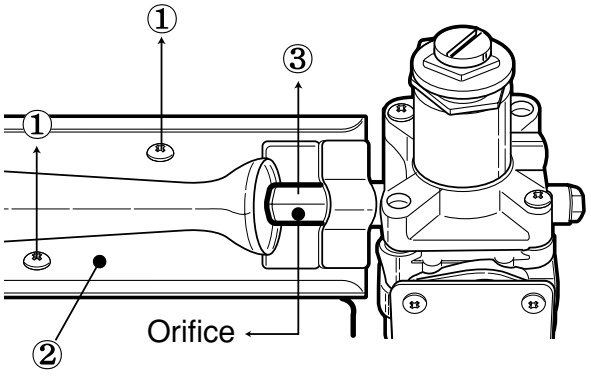

① Remove 2 screws.
② Disassemble the pipe assembly.
③ Replace Natural Gas orifice with Propane Gas orifice.

Gas type	Orifice P/No	Marking	Shape
Natural Gas	4948EL4001B	NCU	
Propane Gas	4948EL4002B	PCU	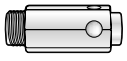

※ **Kit contents** : Orifice (Dia. = 1.613mm, for Propane Gas)
: Replace Label
: Instruction sheet

■ GAS VALVE FLOW

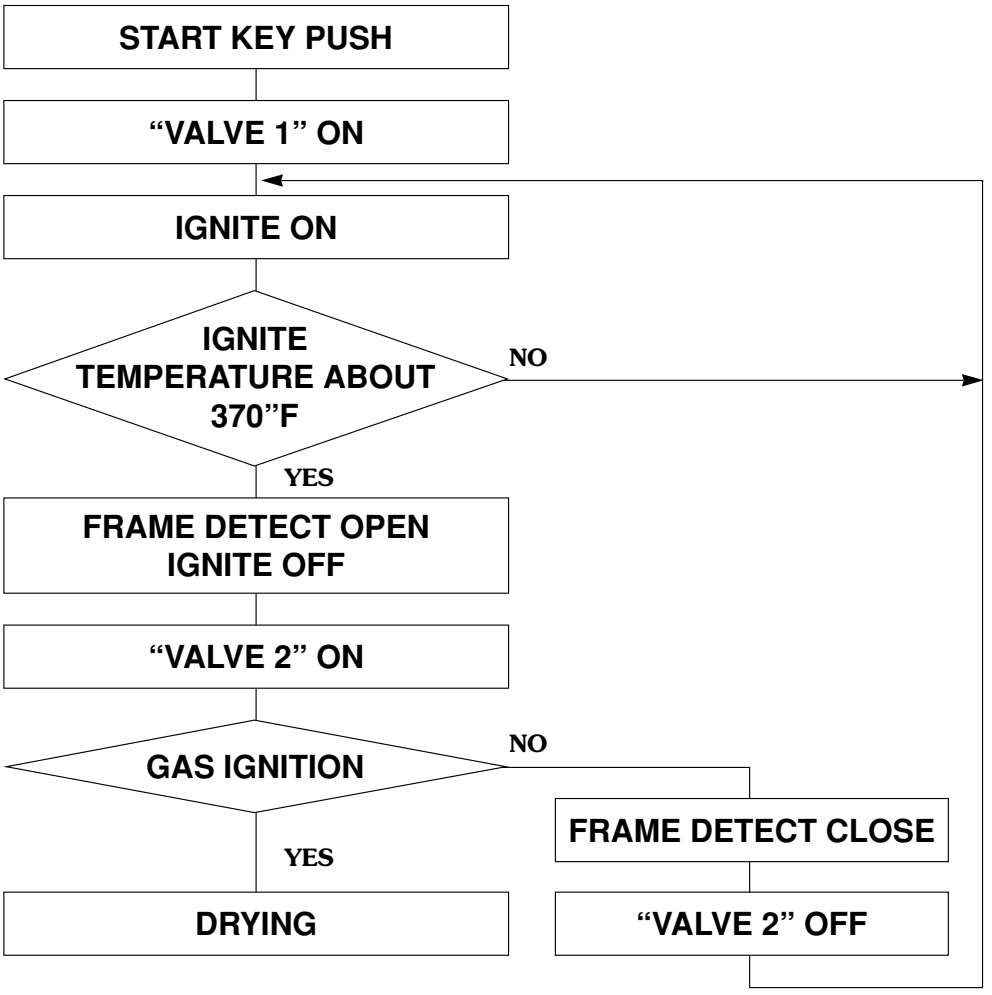

GAS IGNITION

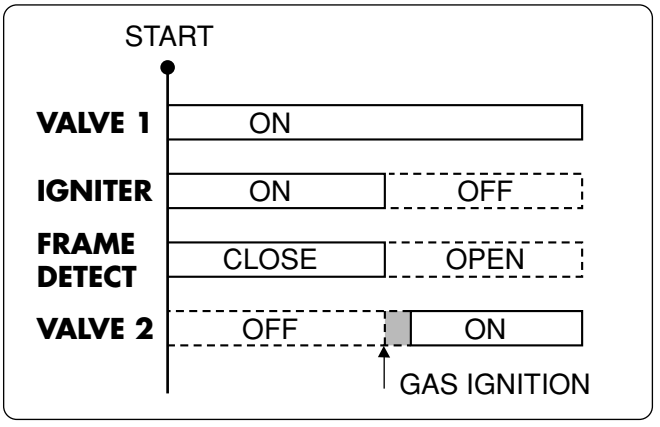

GAS VALVE STRUCTURE

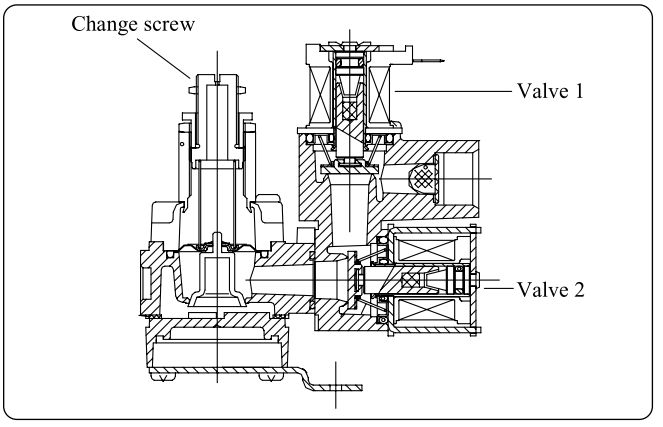

11 DISASSEMBLY INSTRUCTIONS

✻ Disassemble and repair the unit only after pulling out power plug from the outlet.

TOP PLATE

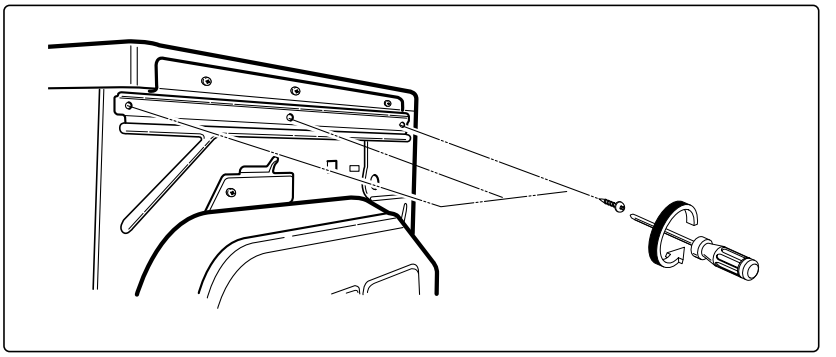

1. Remove 3 screws on the plate upper.

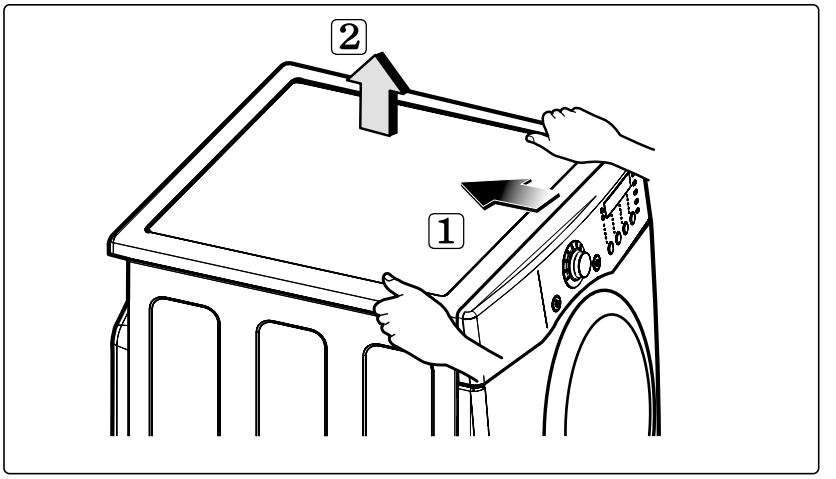

2. Push the top plate
3. Open the top plate

CONTROL PANEL ASSEMBLY

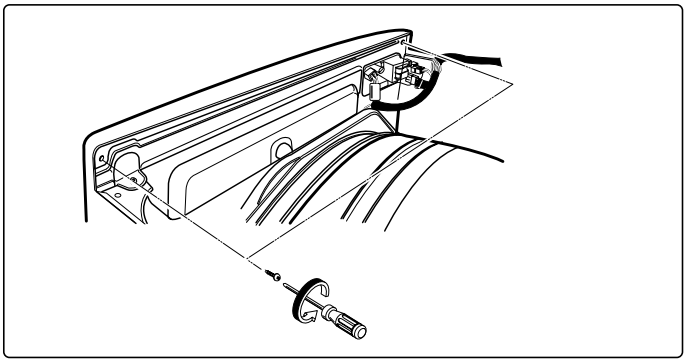

1. Remove 2 screw on the control panel frame.

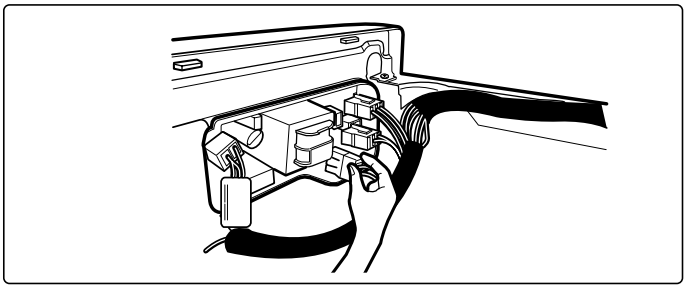

2. Disconnect the connectors.

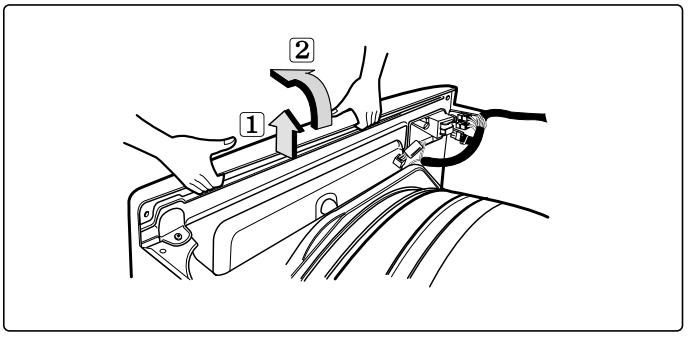

3. Pull the control panel assembly.

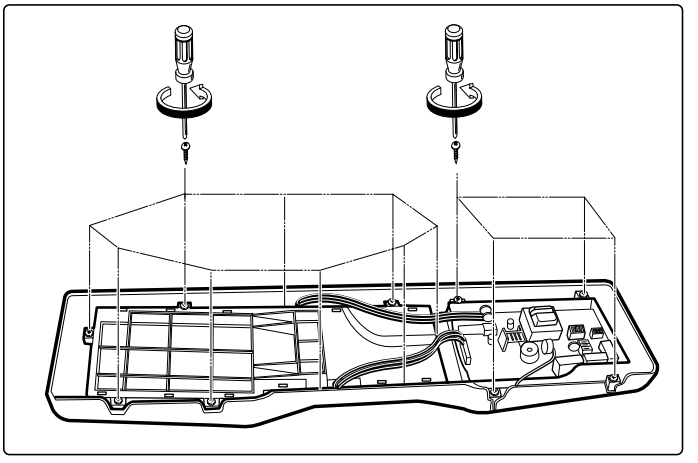

4. Remove 9 screws on the PWB(PCB) assembly, display.
5. Remove 4 screws on the PWB(PCB) assembly, main.
6. Disassemble the control panel assembly.

COVER CABINET

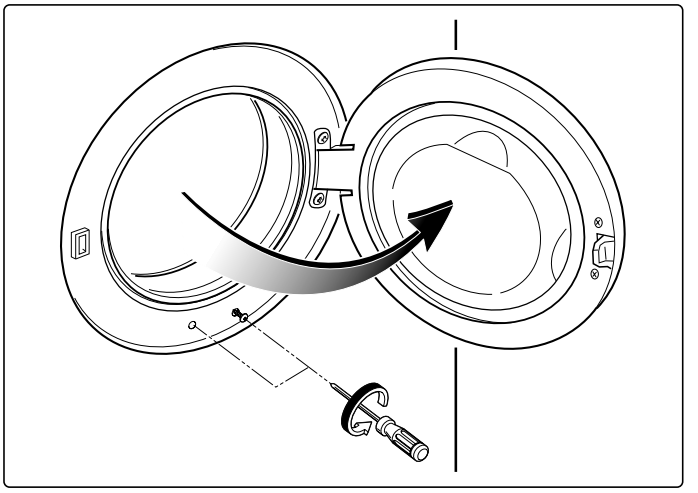

1. Open the top plate.
2. Open the control panel assembly.
3. Open the door assembly.
4. Remove 2 screws.

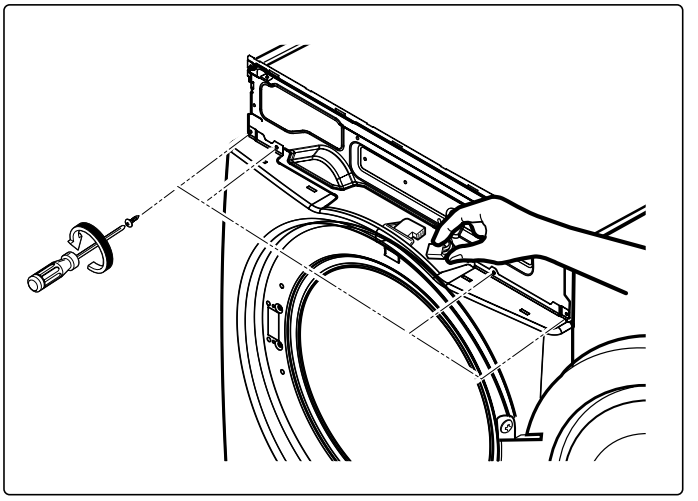

5. Remove 4 screws from upper side.
6. Disconnect the harness of door switch.

TUB DRUM [FRONT]

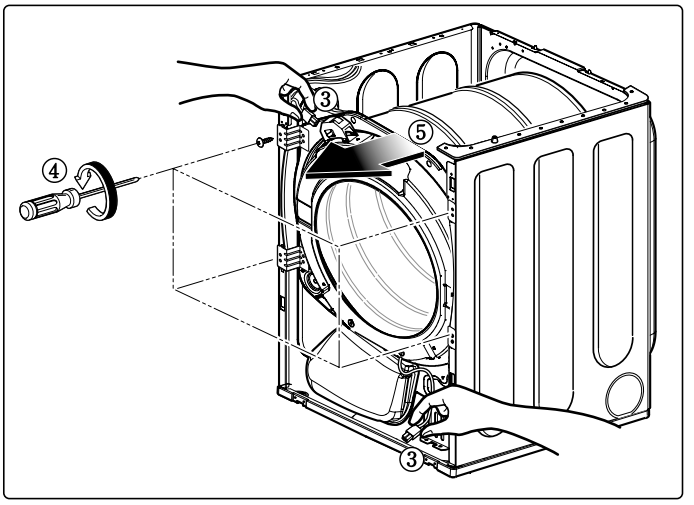

1. Open the top plate.
2. Remove Cover Cabinet.
3. Disconnect the door lamp and electro sensor connector.
4. Remove 4 screws.
5. Disassemble the Tub Drum [Front].

DRUM ASSEMBLY

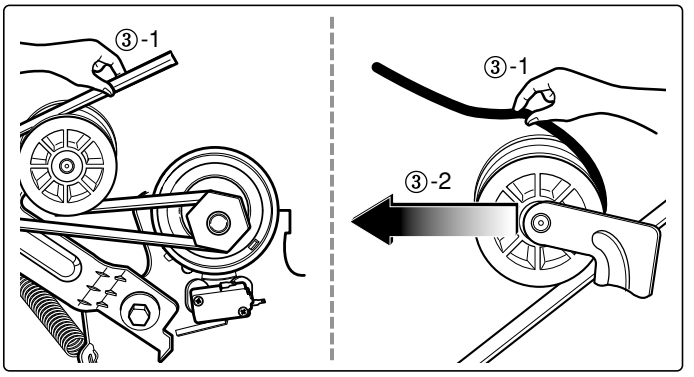

1. Open the top plate.
2. Remove the Cover Cabinet and Tub drum [front].
3. Disengage belt from motor and idler pulleys.
4. Carefully remove Drum out through front of dryer.

CHANGING THE DRUM LAMP

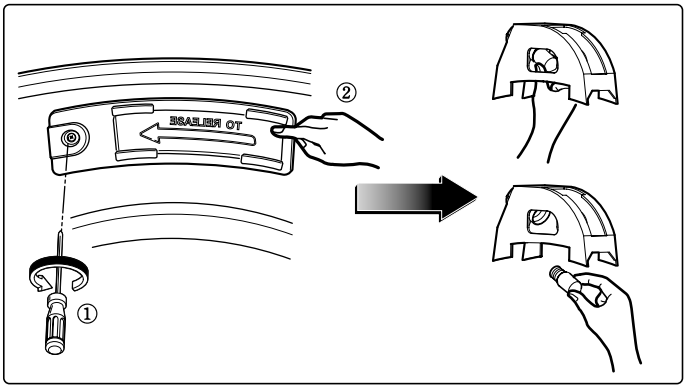

1. Open the door.
2. Remove the screw holding the drum lamp shield in place.
3. Slide the shield up and remove.
4. Remove the bulb and replace with a 15 watt, 120 volt candelabra-base bulb.
5. Replace the lamp shield and screw.

DRYER EXHAUST CHANGE

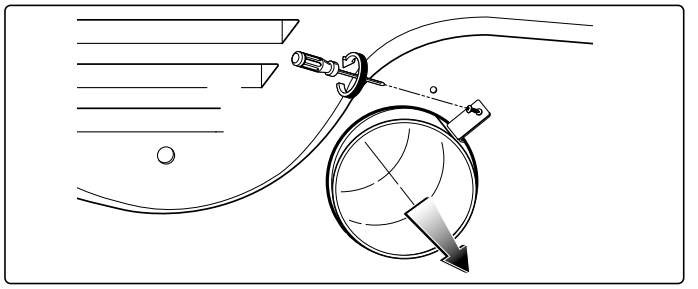

1. Remove screw & exhaust duct.

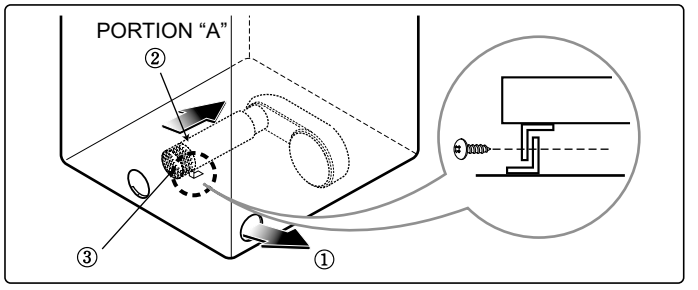

2. Detach and remove the bottom, left or right side knockout as desired.

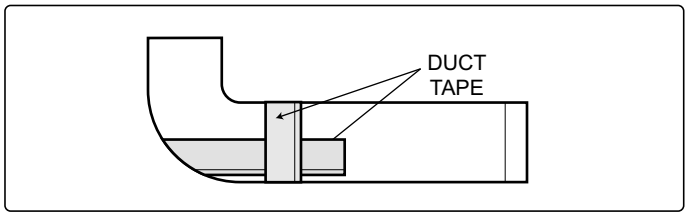

3. Reconnect the new duct[11 in(28cm)] to the blower housing, and attach the duct to the base.

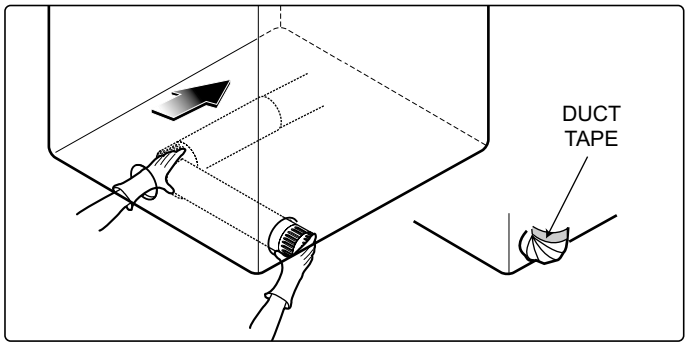

4. Pre-assemble 4" elbow with 4" duct.
Wrap duct tape around joint.

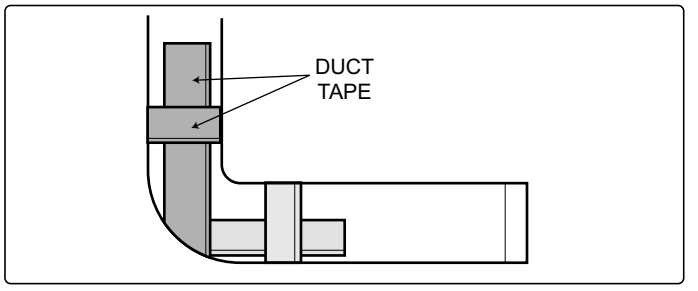

5. Insert duct assembly, elbow first, through the side opening and connect the elbow to the dryer internal duct.

FILTER ASSEMBLY

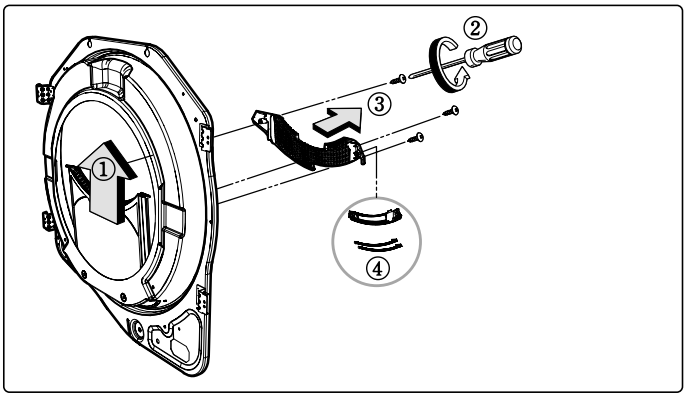

1. Remove the filter.
2. Remove 3 screws.
3. Pull the grill.
4. Disconnect electro sensor.

BLOWER HOUSING

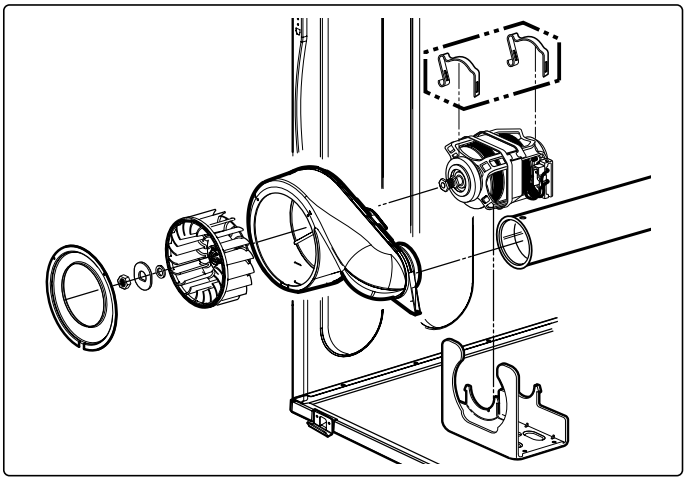

1. Open the top plate.
2. Remove the Cover Cabinet and Tub Drum [Front].
3. Remove the Drum assembly.
4. Remove 2 screws and cover(Air guide).
5. Remove the bolt and washer.
6. Pull the fan.
7. Disconnect the motor clamp and motor.

BACK COVER

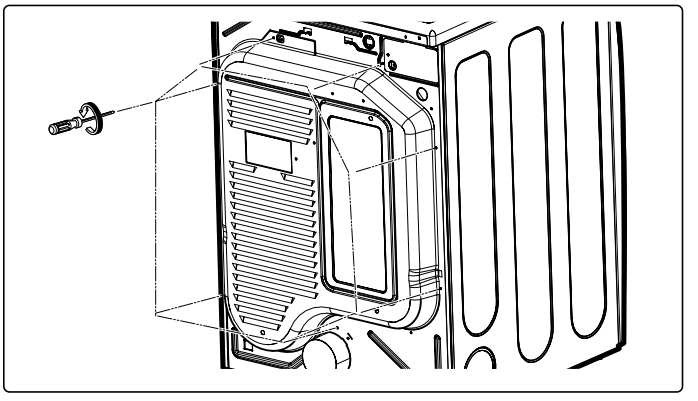

1. Open the top plate.
2. Remove the Cover Cabinet and Tub Drum [Front].
3. Remove the Drum assembly.
4. Remove 7 screws.
5. Pull the Tub Drum [Rear] towards the front.

AIR DUCT

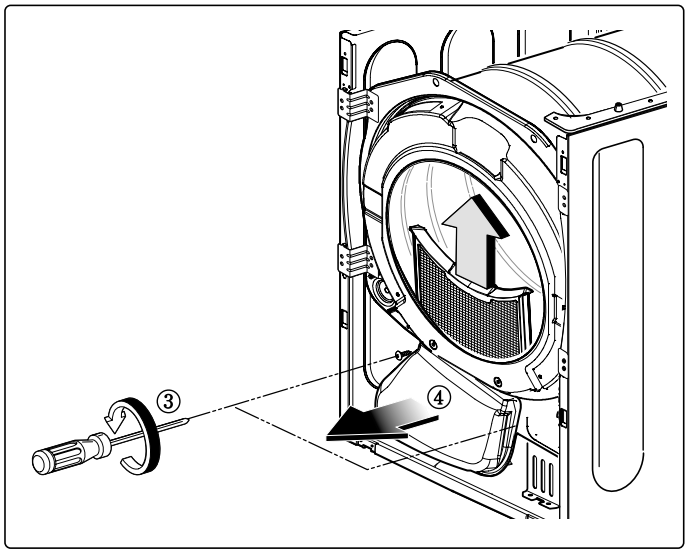

1. Open the top plate.
2. Remove the Cover Cabinet.
3. Remove filter and 2 screws.
4. Pull the air duct towards the front.

ROLLERS

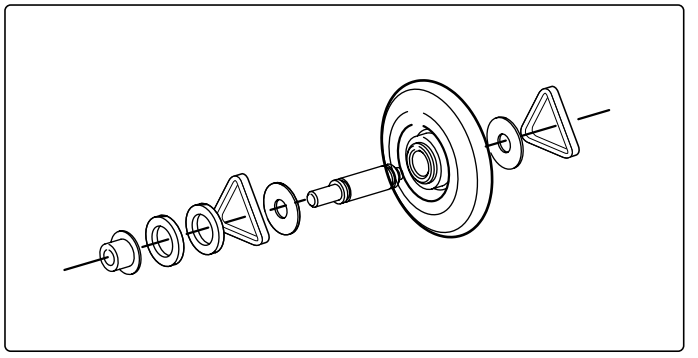

1. Open the top plate.
2. Remove the Cover Cabinet and Tub Drum [Front].
3. Remove the Drum assembly and Tub Drum [Rear].
4. Disconnect Air duct from the Tub Drum [Front].
5. Remove the roller from the Tub Drum [Front] and Tub Drum [Rear].

12 EXPLODED VIEW

12-1. Control Panel & Plate Assembly

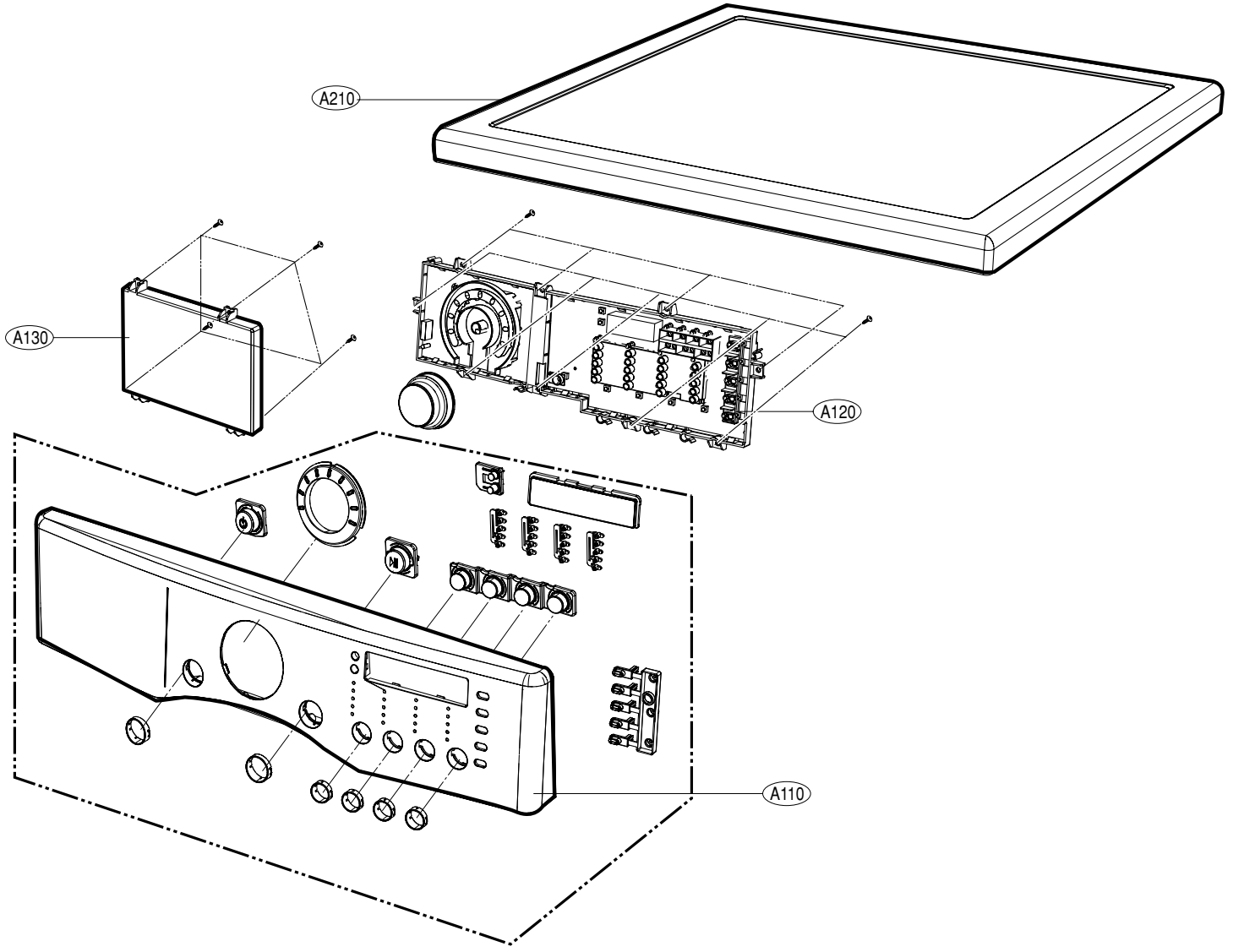

12-2. Cabinet & Door Assembly

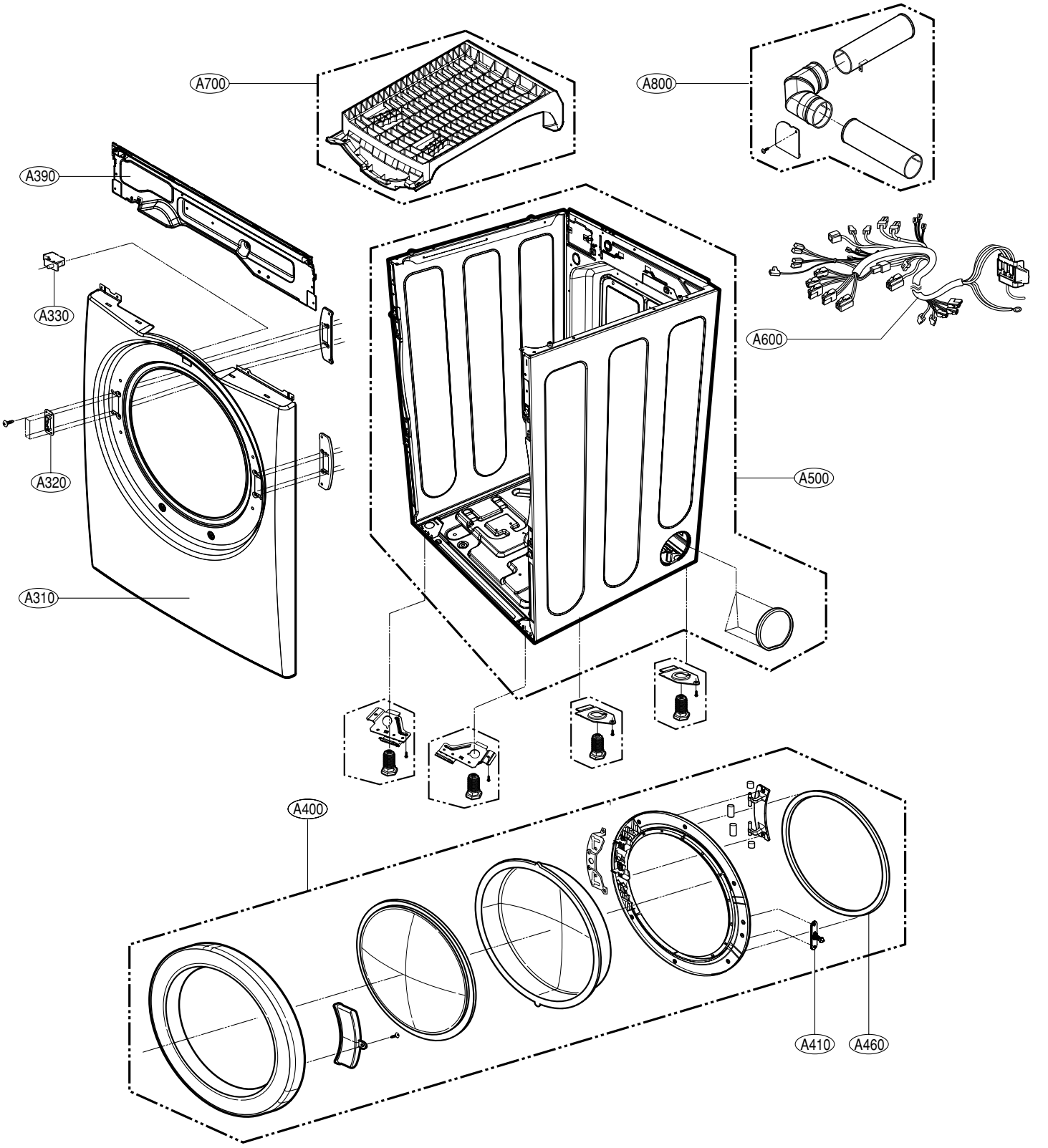

12-3-1. Drum & Motor Assembly : Electric Type

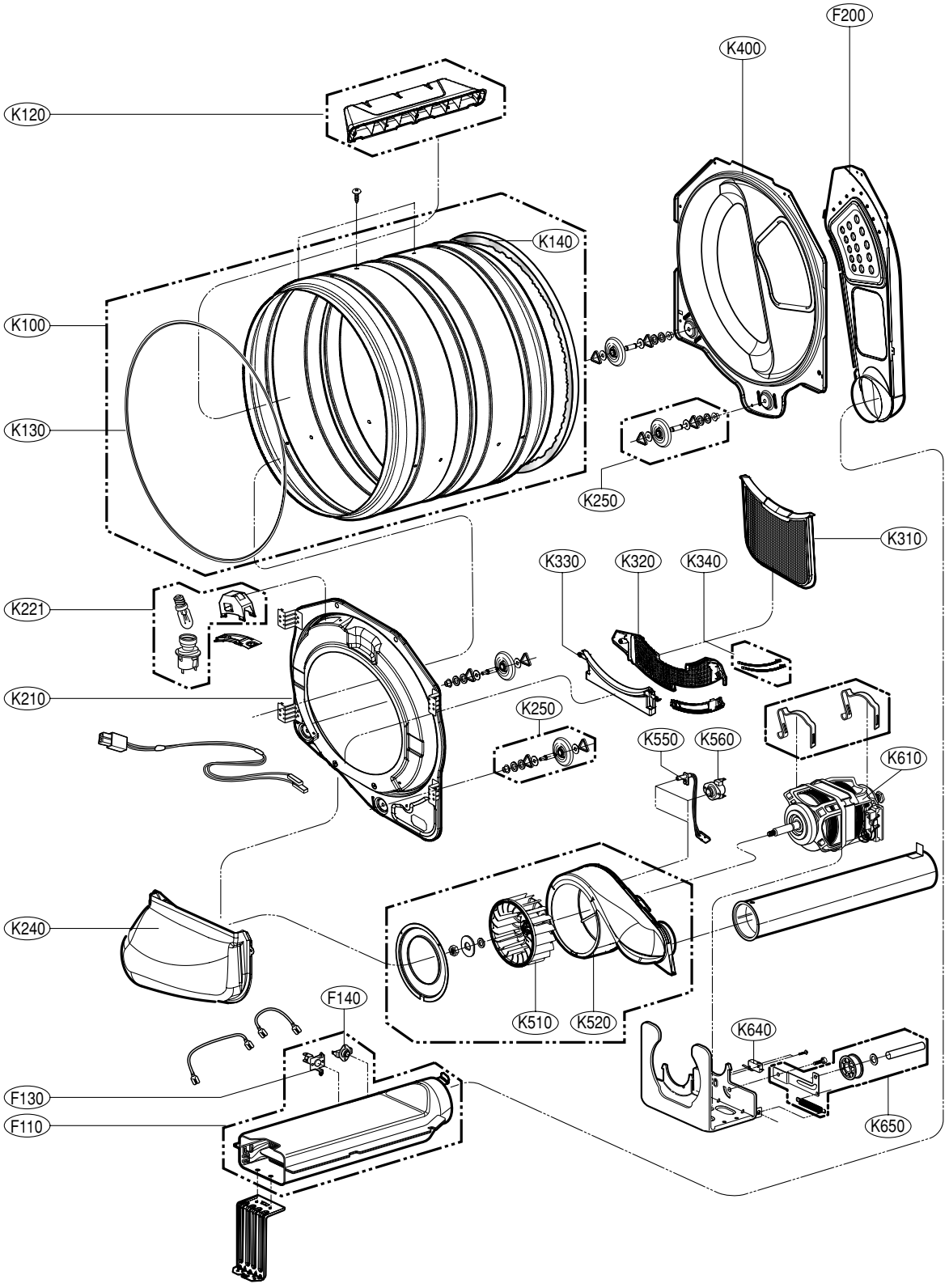

12-3-2. Drum & Motor Assembly : Gas type

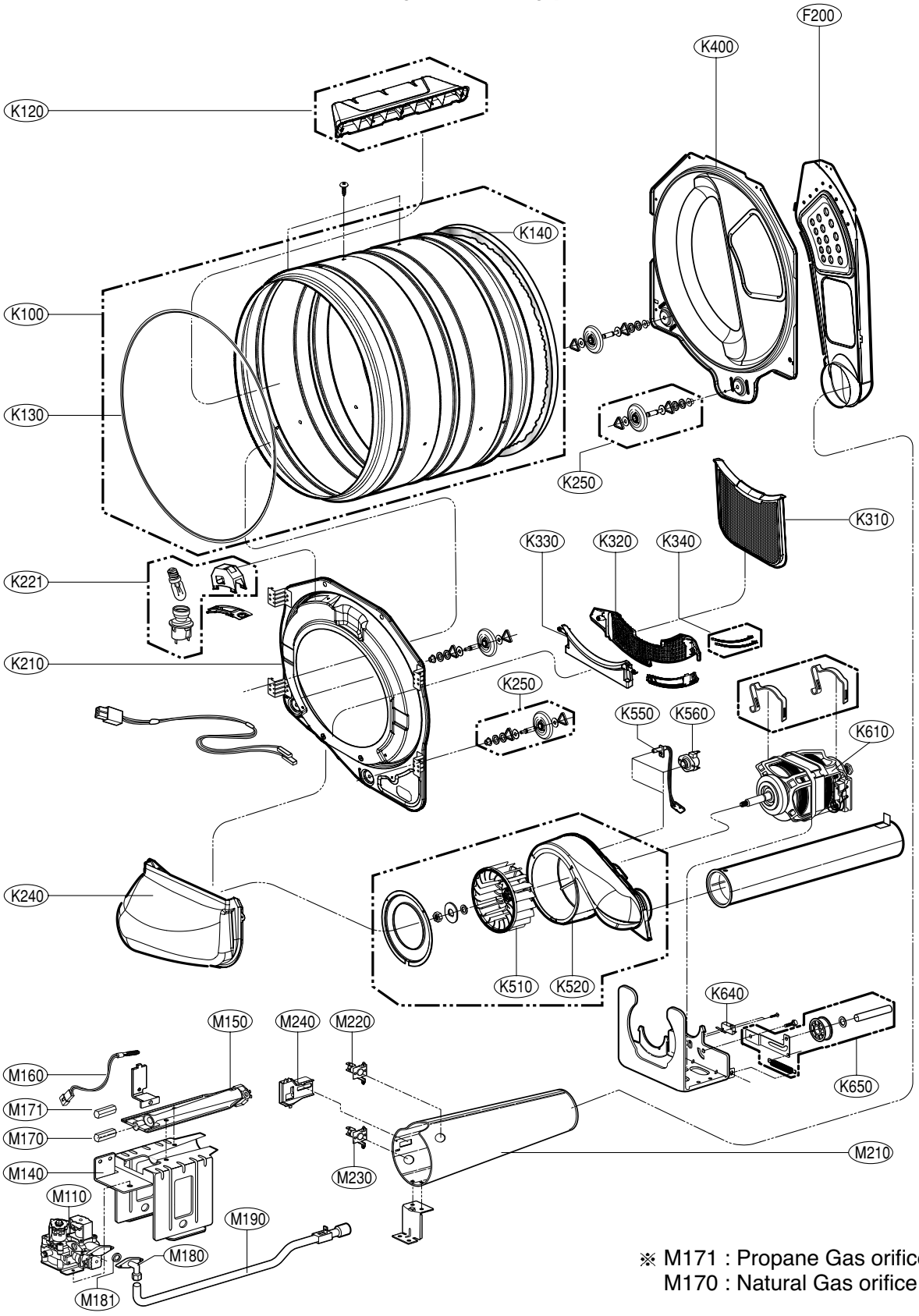

※ M171 : Propane Gas orifice
M170 : Natural Gas orifice

13 REPLACEMENT PARTS LIST

CAUTION : Before replacing any part of these components,
read carefully the safety precautions in this manual.
¡Æ Note : S(Safety Parts), AL(Alternative parts)

LG MODEL : TD- V10050E, TD- V10051E

S	AL	LOC	DESCRIPTION	MODEL P/N		QTY
				DLE5977W	DLE3777W	
		A500	CABINET ASSEMBLY	3091EL0003A	3091EL0003A	1
		K610	MOTOR ASSEMBLY,WM	4681EL1002A	4681EL1002A	1
		K650	PULLEY ASSEMBLY,MOTOR	4561EL3002A	4561EL3002A	1
		K640	SWITCH,MICRO	3W40025D	3W40025D	1
		K510	BLOWER ASSEMBLY	5835EL1002A	5835EL1002A	1
		K520	HOUSING ASSEMBLY (MECH),BLOWER	3661EL1001C	3661EL1001C	1
		K550	THERMISTOR ASSEMBLY	6323EL2001B	6323EL2001B	1
		K560	THERMOSTAT ASSEMBLY	6931EL3002A	6931EL3002A	1
		K400	TUB,DRUM[BACK]	3044EL0002B	3044EL0002B	1
		F200	DUCT ASSEMBLY	5209EL1001C	5209EL1001C	1
		K250	ROLLER ASSEMBLY	4581EL3001A	4581EL3001A	2
		F110	HEATER ASSEMBLY	5301EL1001E	5301EL1001E	1
		F130	THERMOSTAT ASSEMBLY	6931EL3003D	6931EL3003D	1
		F140	THERMOSTAT ASSEMBLY	6931EL3001E	6931EL3001E	1
		A600	HARNESS,PWB	6877EL1007A	6877EL1007A	1
		K100	TUB ASSEMBLY,DRUM	3045EL1002C	3045EL1002C	1
		K140	SEAL	4036EL3001A	4036EL3001A	2
		K120	LIFTER	4432EL1002B	4432EL1002B	3
		K130	BELT,POLY-V	4400EL2001A	4400EL2001A	1
		K210	TUB,DRUM[FRONT]	3044EL1001A	3044EL1001A	1
		K221	LAMP ASSEMBLY	6913EL3002C	6913EL3002C	1
		K250	ROLLER ASSEMBLY	4581EL3001A	4581EL3001A	2
		K240	DUCT ASSEMBLY	5209EL1002A	5209EL1002A	1
		K320	COVER,GUIDE	3550EL1006B	3550EL1006B	1
		K340	SENSOR	6500EL3001A	6500EL3001A	2
		K330	GUIDE,FILTER	4974EL1003B	4974EL1003B	1
		K310	FILTER ASSEMBLY,LINT	5231EL1003B	5231EL1003B	1
		A390	FRAME ASSEMBLY	3211EL1003A	3211EL1003A	1
		A310	COVER,CABINET	3550EL0005A	3550EL0005A	1
		A330	SWITCH ASSEMBLY,DOOR	6601EL3001A	6601EL3001A	1
		A320	LATCH ASSEMBLY	4027EL1001A	4027EL1001A	1
		A400	DOOR ASSEMBLY	3581EL0002A	3581EL0002D	1
		A410	LATCH,HOOK	4026EL3007A	4026EL3007A	1
		A460	GASKET	4986EL2004A	4986EL2004A	1
		A210	TOP PLATE ASSEMBLY	3456ER0002D	3456ER0002E	1
		A110	PANEL,CONTROL	3720EL0001A	3720EL0001A	1
		A130	PWB(PCB) ASSEMBLY,MAIN	6871EC1121A	6871EC1121E	1
		A120	PWB(PCB) ASSEMBLY,DISPLAY	6871EC1115A	6871EC1115C	1
		A700	RACK	3750EL1001B	3750EL1001B	1
		A800	SIDE VENTING KIT	383EEL9001B	383EEL9001B	1

CAUTION : Before replacing any part of these components,
read carefully the safety precautions in this manual.
¡ÆNote : S(Safety Parts), AL(Alternative parts)

LG MODEL : TD- V10050G, TD- V10051G

S	AL	LOC	DESCRIPTION	MODEL P/N		QTY
				DLG5988W	DLG3788W	
		A500	CABINET ASSEMBLY	3091EL0003B	3091EL0003B	1
		K610	MOTOR ASSEMBLY,WM	4681EL1002A	4681EL1002A	1
		K650	PULLEY ASSEMBLY,MOTOR	4561EL3002A	4561EL3002A	1
		K640	SWITCH,MICRO	3W40025D	3W40025D	1
		K510	BLOWER ASSEMBLY	5835EL1002A	5835EL1002A	1
		K520	HOUSING ASSEMBLY (MECH),BLOWER	3661EL1001C	3661EL1001C	1
		K550	THERMISTOR ASSEMBLY	6323EL2001B	6323EL2001B	1
		K560	THERMOSTAT ASSEMBLY	6931EL3002A	6931EL3002A	1
		K400	TUB,DRUM[BACK]	3044EL0002B	3044EL0002B	1
		F200	DUCT ASSEMBLY	5209EL1001D	5209EL1001D	1
		K250	ROLLER ASSEMBLY	4581EL3001A	4581EL3001A	2
		M210	FUNNEL	3016EL1001A	3016EL1001A	1
		M230	THERMOSTAT ASSEMBLY	6931EL3003C	6931EL3003C	1
		M220	THERMOSTAT ASSEMBLY	6931EL3004B	6931EL3004B	1
		M240	SENSOR ASSEMBLY	6501EL3001A	6501EL3001A	1
		M140	GUIDE,BURNER	4974EL1001A	4974EL1001A	1
		M150	PIPE ASSEMBLY	5201EL3001A	5201EL3001A	1
		M110	VALVE ASSEMBLY,GAS	5221EL2002A	5221EL2002A	1
		M190	PIPE ASSEMBLY	5201EL2001A	5201EL2001A	1
		M181	SEAL	4036EL3002A	4036EL3002A	1
		M170	ORIFICE(natural gas)	4948EL4001B	4948EL4001B	1
		M171	ORIFICE(propane gas)	4948EL4002B	4948EL4002B	1
		M180	CONNECTOR (MECH),PIPE	4932EL4001A	4932EL4001A	1
		M160	IGNITER	5318EL3001A	5318EL3001A	1
		A600	HARNESS,PWB	6877EL1008A	6877EL1008A	1
		K100	TUB ASSEMBLY,DRUM	3045EL1002C	3045EL1002C	1
		K140	SEAL	4036EL3001A	4036EL3001A	2
		K120	LIFTER	4432EL1002B	4432EL1002B	3
		K130	BELT,POLY-V	4400EL2001A	4400EL2001A	1
		K210	TUB,DRUM[FRONT]	3044EL1001B	3044EL1001B	1
		K221	LAMP ASSEMBLY	6913EL3002C	6913EL3002C	1
		K250	ROLLER ASSEMBLY	4581EL3001A	4581EL3001A	2
		K240	DUCT ASSEMBLY	5209EL1002A	5209EL1002A	1
		K320	COVER,GUIDE	3550EL1006B	3550EL1006B	1
		K340	SENSOR	6500EL3001A	6500EL3001A	2
		K330	GUIDE,FILTER	4974EL1003B	4974EL1003B	1
		K310	FILTER ASSEMBLY,LINT	5231EL1003B	5231EL1003B	1
		A390	FRAME ASSEMBLY	3211EL1003A	3211EL1003A	1
		A310	COVER,CABINET	3550EL0005A	3550EL0005A	1
		A330	SWITCH ASSEMBLY,DOOR	6601EL3001A	6601EL3001A	1
		A320	LATCH ASSEMBLY	4027EL1001A	4027EL1001A	1
		A400	DOOR ASSEMBLY	3581EL0002A	3581EL0002D	1
		A410	LATCH,HOOK	4026EL3007A	4026EL3007A	1
		A460	GASKET	4986EL2004A	4986EL2004A	1
		A210	TOP PLATE ASSEMBLY	3457ER1006D	3457ER1006E	1
		A110	PANEL,CONTROL	3720EL0001A	3720EL0001A	1
		A130	PWB(PCB) ASSEMBLY,MAIN	6871EC1121B	6871EC1121F	1
		A120	PWB(PCB) ASSEMBLY,DISPLAY	6871EC1115B	6871EC1115D	1
		A700	RACK	3750EL1001B	3750EL1001B	1
		A800	SIDE VENTING KIT	383EEL9001B	383EEL9001B	1